WAGNER®
Employee Owned

LEGATO™
GLASS RAILING POST SYSTEM

Application Guideline
&
Supporting Design Calculations

Prepared for Wagner Architectural Systems
By Stutzki Engineering, INC
Milwaukee, WI
Orig. Issue: July 8, 2019

STUTZKI
ENGINEERING

888-243-6914 // rfq@mailwagner.com
10600 West Brown Deer Road // Milwaukee, WI 53224, USA
© 2019 R&B Wagner, Inc. All Rights Reserved.

LEGATO™
GLASS RAILING POST SYSTEM
ROUND

Application Guideline
&
Supporting Design Calculations

Prepared for Wagner Architectural Systems
By Stutzki Engineering, INC
Milwaukee, WI
Orig. Issue: July 8, 2019

888-243-6914 // rfq@mailwagner.com
10600 West Brown Deer Road // Milwaukee, WI 53224, USA

© 2019 R&B Wagner, Inc. All Rights Reserved.
WagnerArchitectural.com

Table of Contents

1. Project Description 3
2. Codes, Standards, and References 5
3. Design Loads 5
   3.1. Dead Load 5
   3.2. Interior Pressure Load 5
   3.3. Live Load 5
   3.4. Load Combinations 5
4. Railing Component Design 6
   4.1. Design Criteria 6
   4.2. Overall Geometry and Location 6
   4.3. Structural Analysis 7
   4.4. Stress Utilization 9
   4.5. Deflection Utilization 11
5. Railing Support Design 12
   5.1. Reaction Summary 12
   5.2. Design Criteria 12
   5.3. Surface Mounted Bracket Design 13
   5.4. Facia Mounted Bracket Design 23
6. Railing Connection Design 37
   6.1. Design Criteria 37
   6.2. Overall Geometry and Location 37
   6.3. Glass Clip 38
   6.4. Flat Clip 44
   6.5. Spider Clip 48
   6.6. Handrail Connection 57
7. Railing Glass Design 60
   7.1. General Design Criteria 60
   7.2. SG Interlayer 60
   7.3. Overall Location and Geometry 60
   7.4. Glass Panel – Glass Clip Series 61
   7.5. Glass Panel – Flat Clip Series 65
   7.6. Glass Panel – Spider Clip Series 69
8. Appendix I – Technical Data 73
   8.1. Test Report P18-0055C 73
9. Disclaimers 76
10. Stutzki Engineering 77

© 2019 R&B Wagner, Inc. All Rights Reserved.
WagnerArchitectural.com

1. Project Description

This report pertains to the Wagner interior glass guardrail system – Legato Round System. This report covers design of all handrail components that are installed in accordance with Wagner recommendations and within the defined design parameters. The scope of work includes handrail post and railing design, glass panel analysis, glass clip design, post bracket design, and anchorage design. The support structure design (steel plate or concrete slab) are outside of the scope of this report.

Design Parameters for Surface Mounted System:

Geometry:

- Height of railing above finished floor = 42”
- Max. post height = 42”
- Max. post spacing = 42”

Loads:

- Railing complies with applicable loads per 2015 IBC
- Handrail linear load = 50plf @ 42” AFF
- Handrail concentrated load = 200lbf @ 42” AFF
- Infill panel linear load = 50plf up to 42” AFF (deflection purposes only)
- Infill panel concentrated load = 50lbf over 1ft x 1ft area.

Glass:

- All glass plies to be fully tempered
- All glass panels to be laminated with Sentry Glass (SG) interlayer
- Min. glass makeup = 1/4" FT glass + 0.06” SG interlayer + 1/4" FT glass
- Max. glass makeup = 5/16" FT glass + 0.06” SG interlayer + 5/16" FT glass
- Glass processing to conform with ASTM C1048, manufacturer’s processing criteria, and Wagner glass sizing recommendation

Anchors in Concrete:

- Use Hilti 3/8” Dia, 316 SS, HAS-R threaded rods and HIT-HY 200 Epoxy with 5.5” min. embed. depth
- Min. concrete strength: f’c = 4000psi @ 28 days
- Normal weight concrete
- Cracked concrete conditions
- Min. anchor edge distance = 5” (after installation)
- Min. slab thickness = 8”
- Concrete slab design is outside of the scope of this report

Anchors in Steel Plate:

- Use 1/2”-13 stainless steel bolt, condition A or better
- Bolt can be tapped or through bolt
- For tapped bolts min. steel plate strength: Fy = 36ksi, Fu = 58ksi
- For tapped bolts min. bolt thread engagement = 3/8”
- Steel plate design is outside of the scope of this report

© 2019 R&B Wagner, Inc. All Rights Reserved.
WagnerArchitectural.com

Design Parameters for Facia Mounted System:

Geometry:

- Height of railing above finished floor = 42”
- Max. post assembly height (post with bracket) = 50-1/2”
- Max. post spacing = 42”

Loads:

- Railing complies with applicable loads per 2015 IBC
- Handrail linear load = 50plf @ 42” AFF
- Handrail concentrated load = 200lbf @ 42” AFF
- Infill panel linear load = 50plf up to 42” AFF (deflection purposes only)
- Infill panel concentrated load = 50lbf over 1ft x 1ft area.

Glass:

- All glass plies to be fully tempered
- All glass panels to be laminated with Sentry Glass (SG) interlayer
- Min. glass makeup = 1/4" FT glass + 0.06” SG interlayer + 1/4" FT glass
- Max. glass makeup = 5/16" FT glass + 0.06” SG interlayer + 5/16" FT glass
- Glass processing to conform with ASTM C1048, manufacturer’s processing criteria, and Wagner glass sizing recommendation

Anchors in Concrete:

- Use Hilti HUS-HR M10 anchor with 3.563” min. embedment depth
- Min. concrete strength: f’c = 4000psi @ 28 days
- Normal weight concrete
- Uncracked concrete conditions
- Min. anchor edge distance = 4” (after installation)
- Min. slab thickness = 6”
- Concrete slab design is outside of the scope of this report

Anchors in Steel Plate:

- Use 1/2”-13 stainless steel bolt, condition A or better
- Bolt can be tapped or through bolt
- For tapped bolts min. steel plate strength: Fy = 36ksi, Fu = 58ksi
- For tapped bolts min. bolt thread engagement = 3/8”
- Steel plate design is outside of the scope of this report

© 2019 R&B Wagner, Inc. All Rights Reserved.
WagnerArchitectural.com

2. Codes, Standards, and References

1) 2015 International Building Code
2) AAMA TIR A9-14 Metal Curtain Wall Fasteners
3) ACI 318–14 Building Code Requirements for Structural Concrete
4) AISC 360-10 Specification for Structural Steel Buildings and AISC 14th ed
5) AISC Design Guide 27 “Structural Stainless Steel”
6) ASCE7-10 Minimum Design Loads for Buildings and Other Structures
7) ASTM C1048 Standard Specification for Heat Treated Flat Glass
8) ASTM E1300-16 Standard Practice for Determining Load Resistance of Glass in Buildings

3. Design Loads

3.1. Dead Load

Glass = 13.2psf/in of glass x (5/16” glass + 0.06” Interlayer + 5/16” glass) = 9psf

Stainless Steel = 490pcf

3.2. Interior Pressure Load

PL = 5psf (ASD) Interior Air Pressure (2015 IBC, Section 1607.14)

3.3. Live Load

Handrail Assemblies and Guards shall be designed to resist the following loads:
Linear Live Load = 50plf at 42” above Surface (2015 IBC, Section 1607.8.1)
Concentrated Live Load = 200lbf (2015 IBC, Section 1607.8.1.1)

Other Infill Panels shall withstand the following loads:
Concentrated Live Load = 50lbf distributed over 1 sq ft (2015 IBC, Section 1607.8.1.1)

3.4. Load Combinations

1. Dead + Concentrated Live
2. Dead + Linear Live
3. Dead + Interior Air Pressure

© 2019 R&B Wagner, Inc. All Rights Reserved.
WagnerArchitectural.com

4. Railing Component Design

4.1. Design Criteria

4.1.1. Stainless Steel

316 Stainless Steel (Handrail)	Fy = 30 ksi, min	Fu = 70 ksi, min
316 Stainless Steel (Post and Railing Cap)	Fy = 40 ksi, min	Fu = 70 ksi, min

4.1.2. Deflection Criteria

Max. Deflection = 2L/50

4.2. Overall Geometry and Location

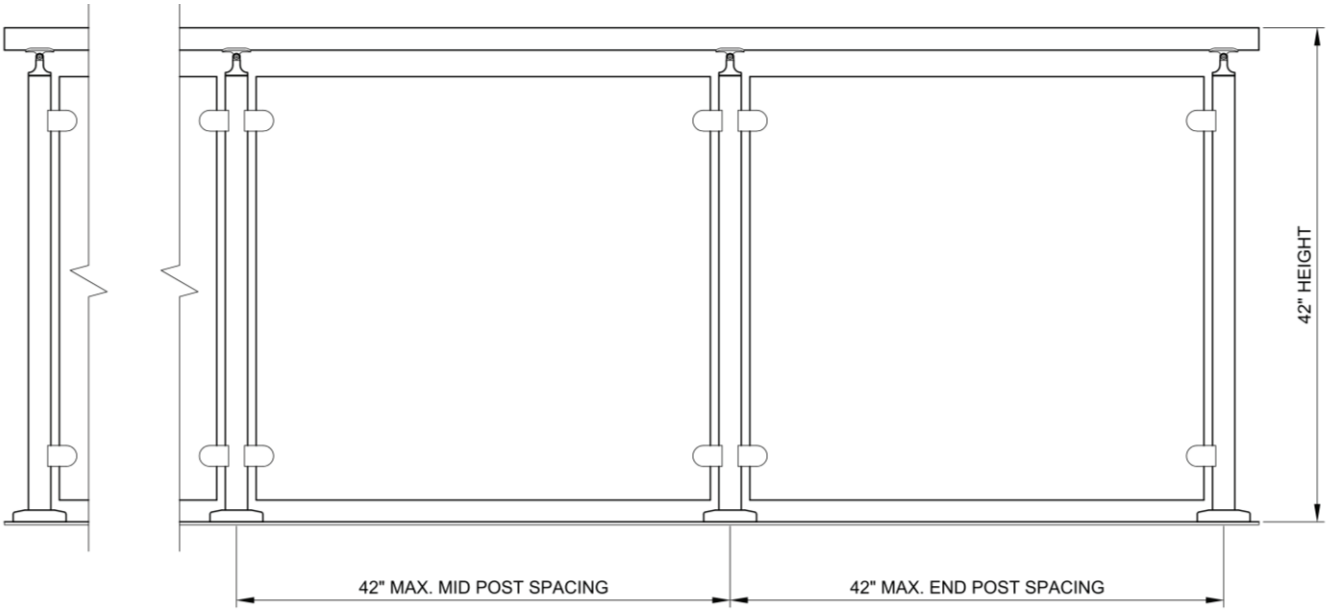

Surface Mounted System

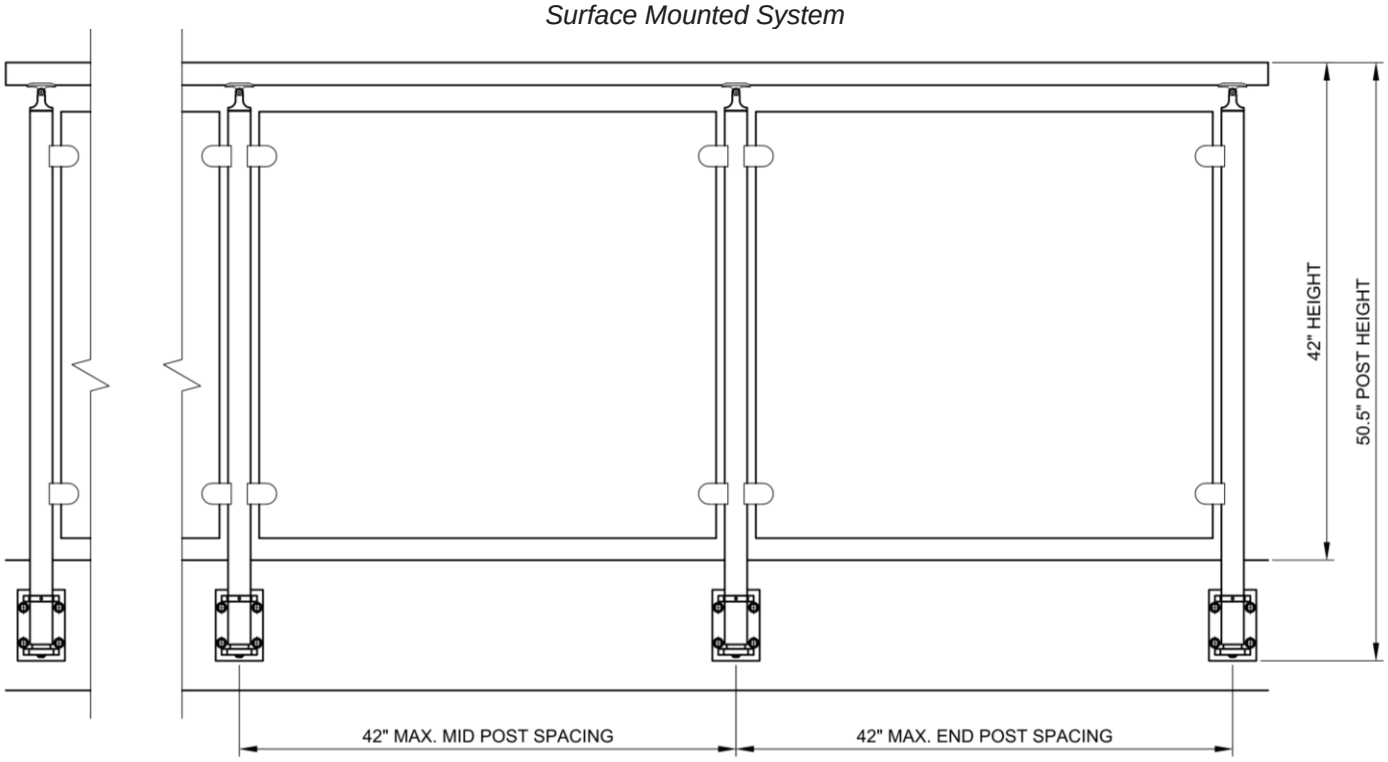

Facia Mounted System

4.3. Structural Analysis

4.3.1. Model Dimensions

Handrail and Posts to be 316 SS 1-1/2" Std. (Schedule 40) Pipe.

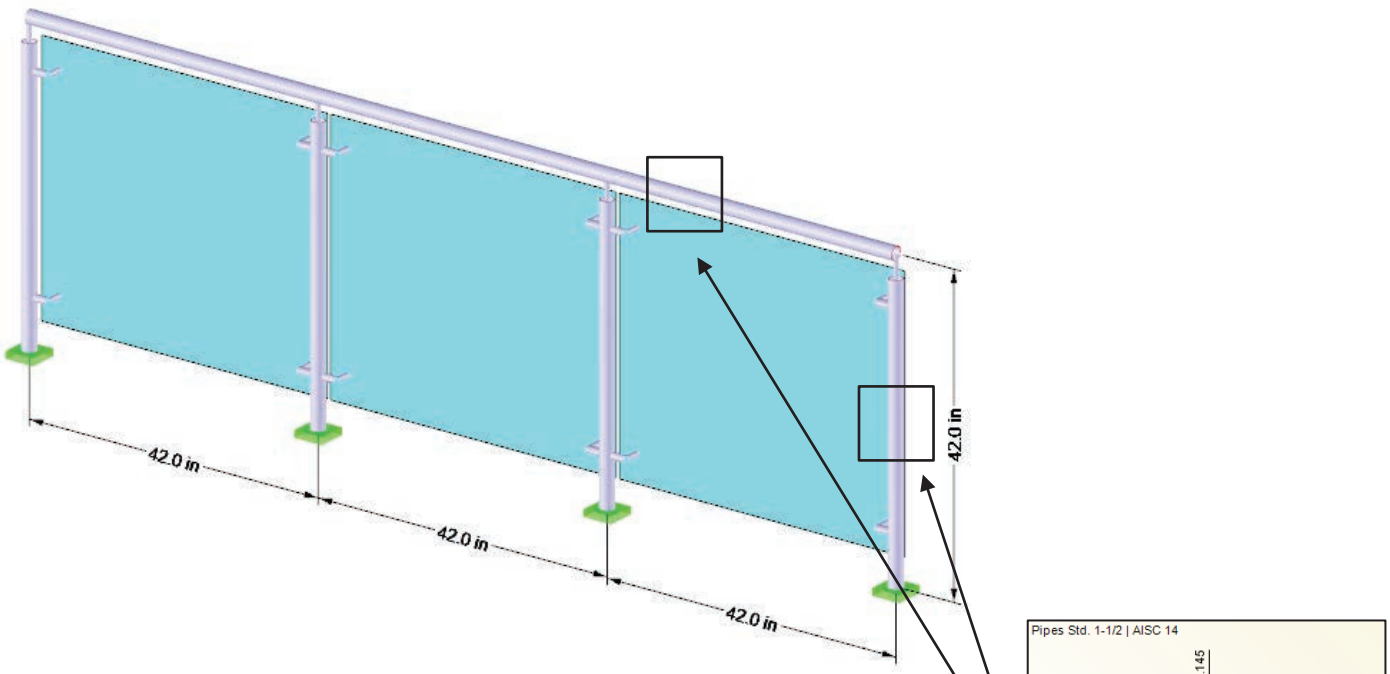

Surface Mounted Model

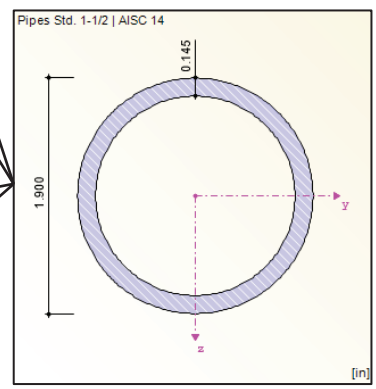

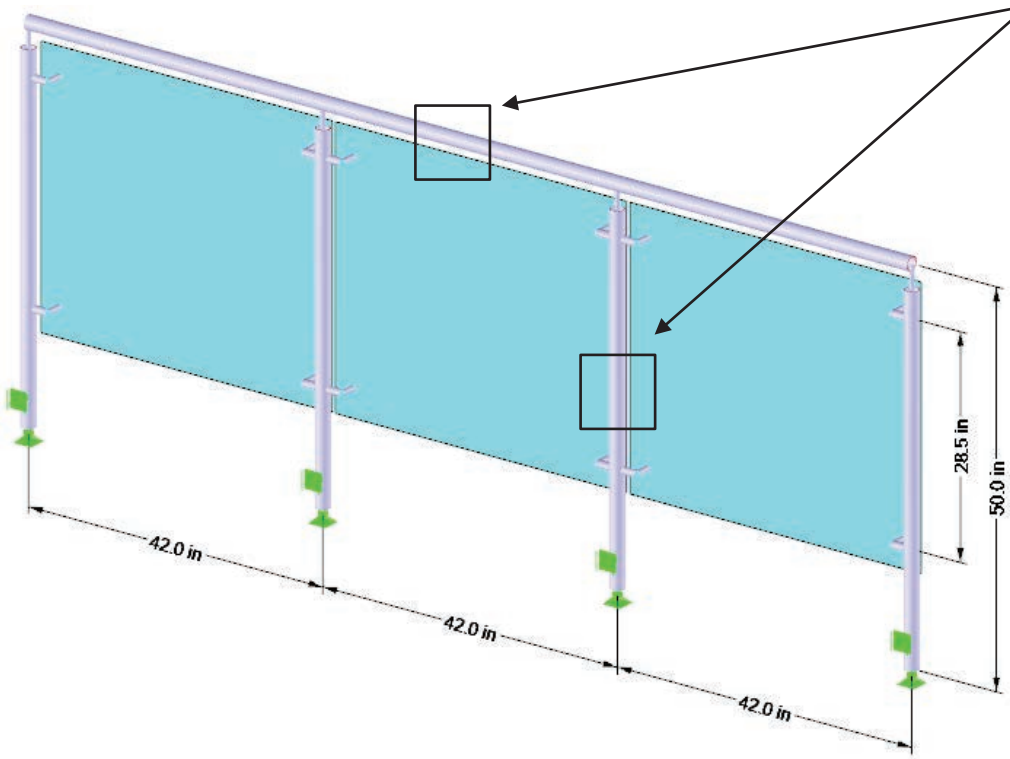

Facia Mounted Model

4.3.2. Model Loads

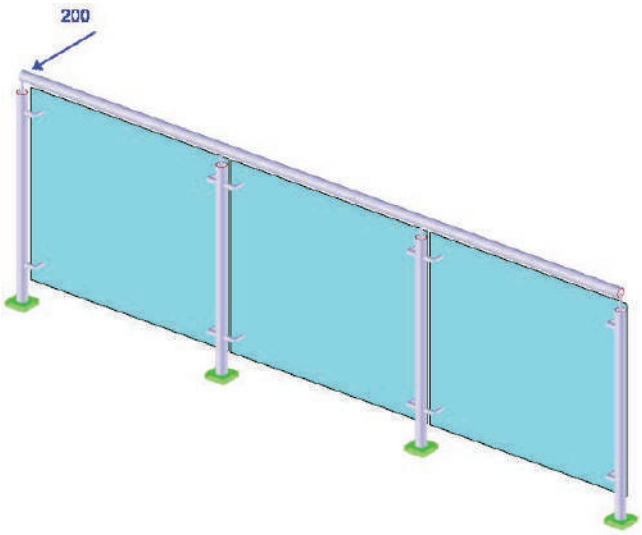

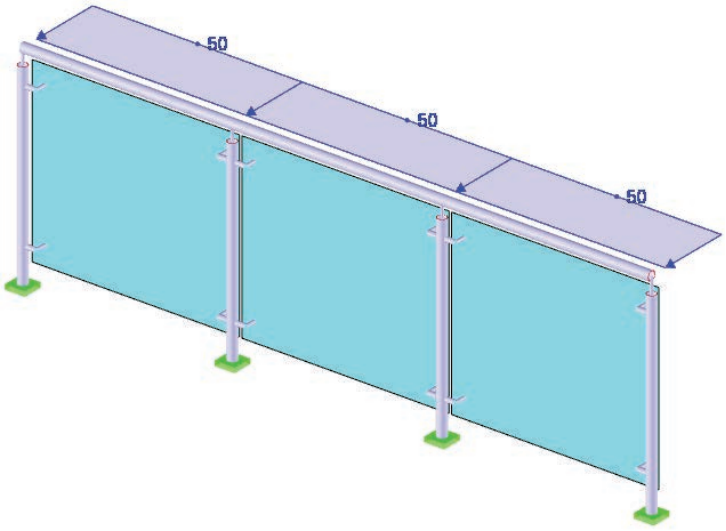

Surface Mounted Model

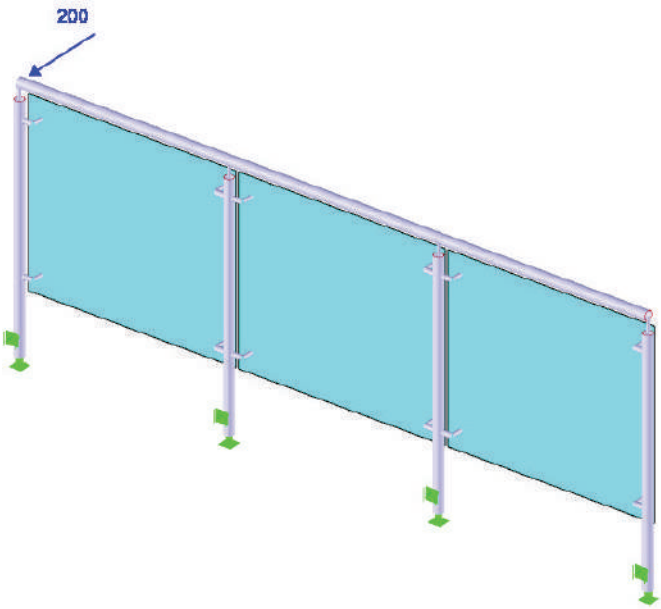

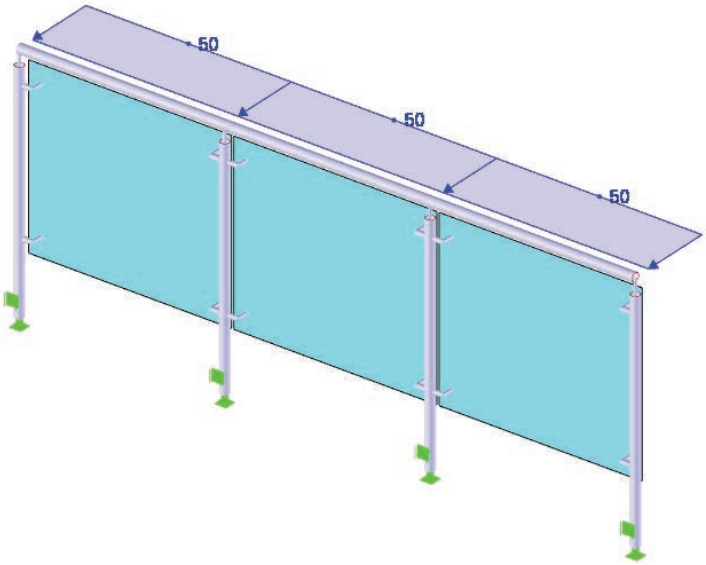

Facia Mounted Model

© 2019 R&B Wagner, Inc. All Rights Reserved.
WagnerArchitectural.com

4.4. Stress Utilization

The handrail components were analyzed per the AISC manual. The software output shows the governing envelope utilization of railing members.

4.4.1. Surface Mounted System

Design utilization based on Stainless Steel strength F_y = 40ksi, F_u = 70ksi

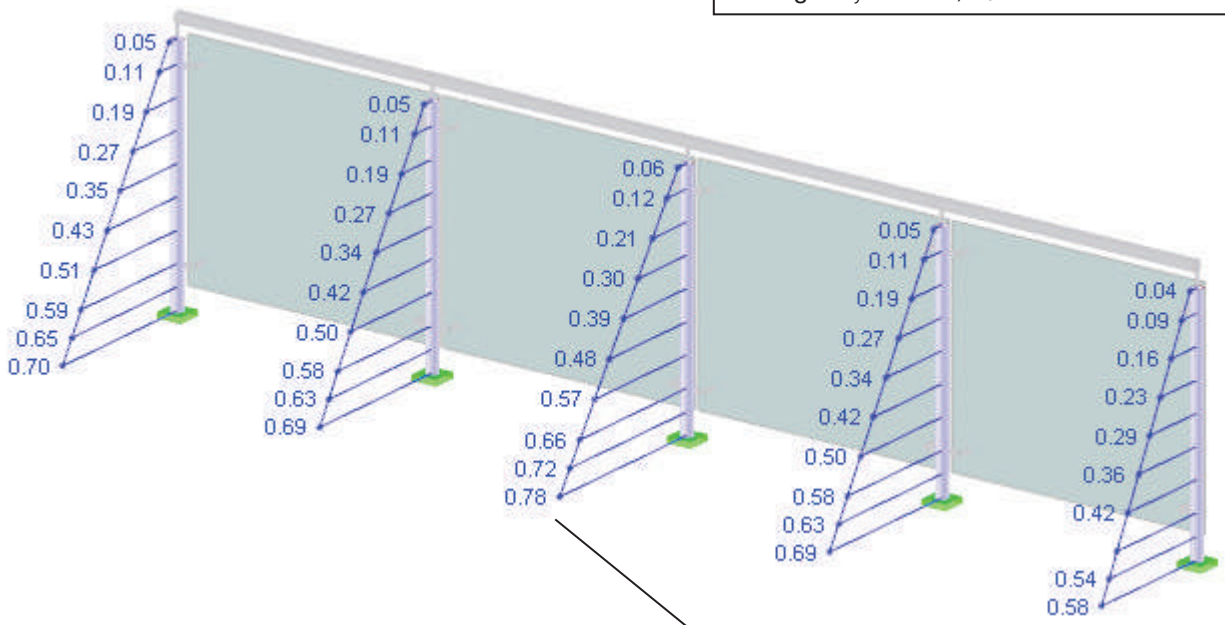

Max. Post Design Utilization = 0.78 < 1.00, OK

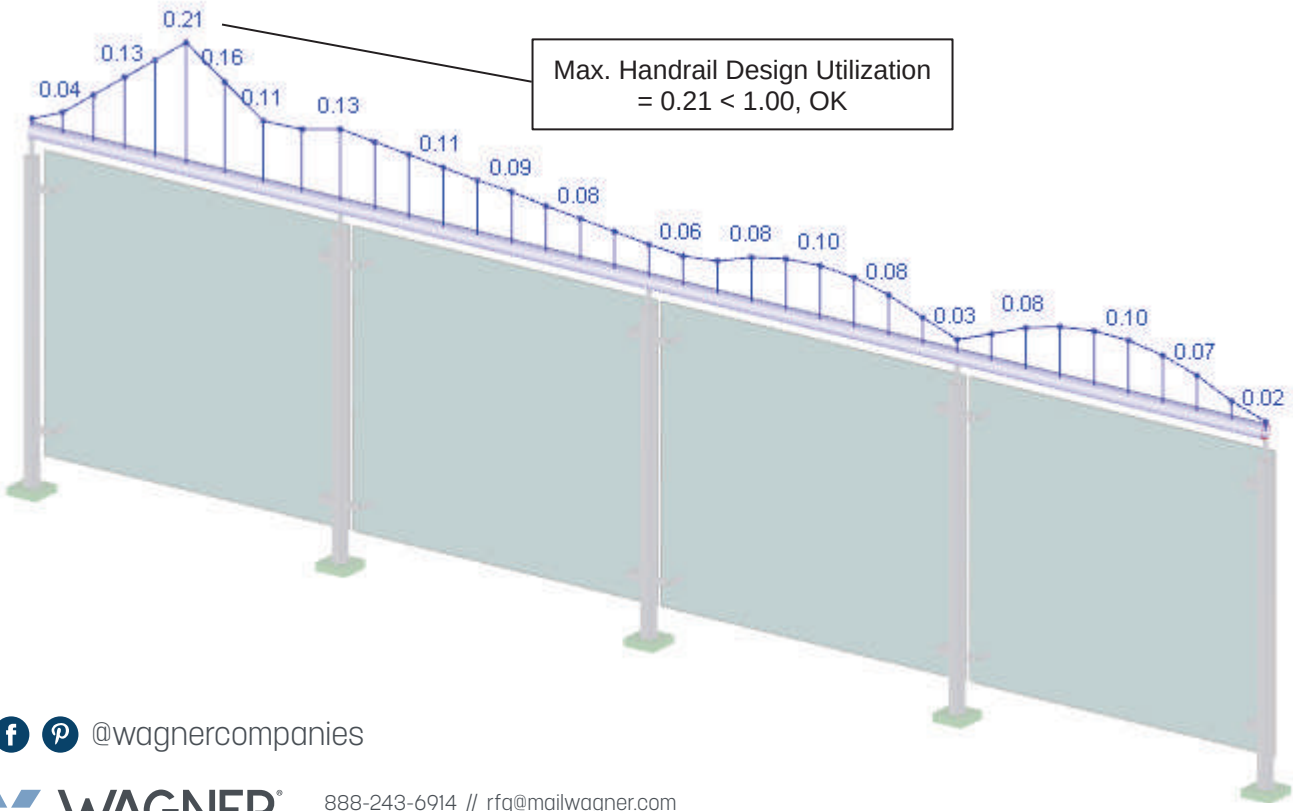

Max. Handrail Design Utilization = 0.21 < 1.00, OK

© 2019 R&B Wagner, Inc. All Rights Reserved.
WagnerArchitectural.com

4.4.2. Facia Mounted System

Design utilization based on Stainless Steel strength F_y = 40ksi, F_u = 70ksi

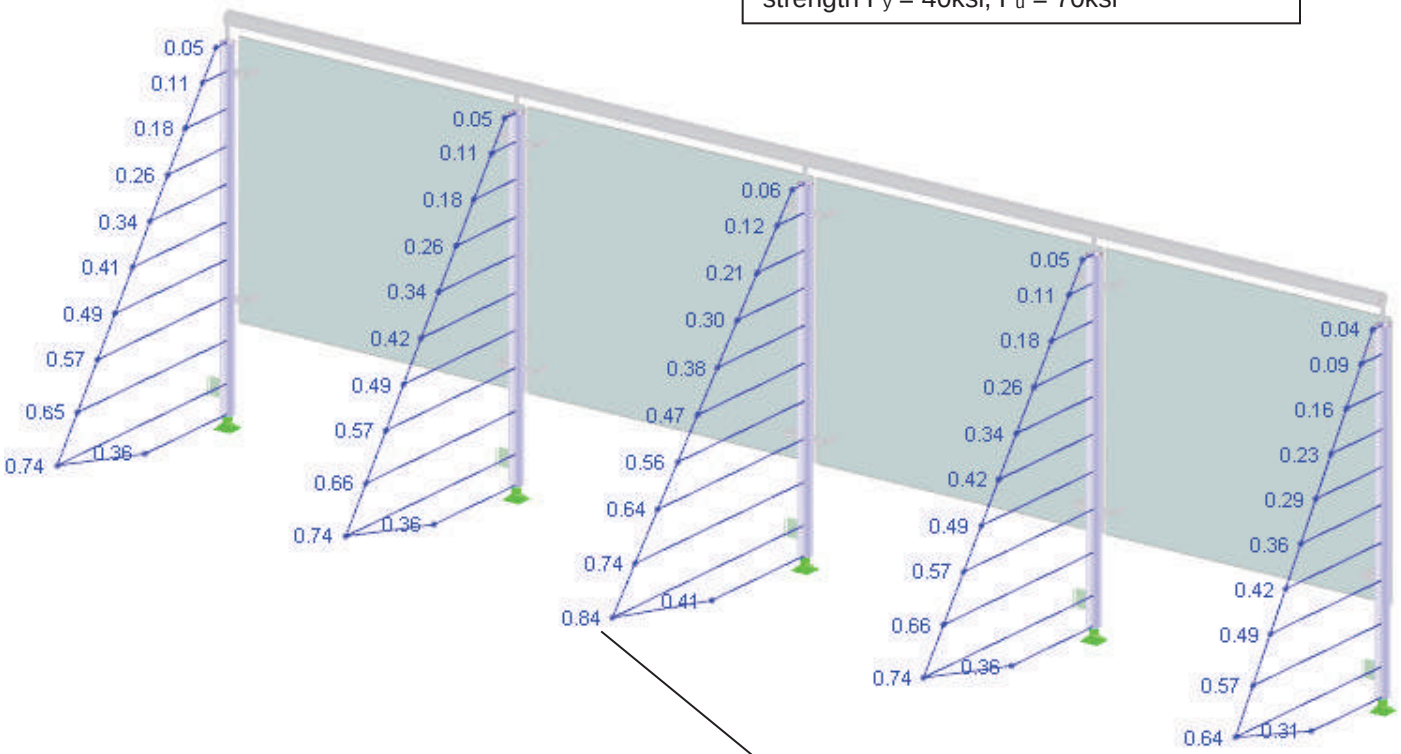

Max. Post Design Utilization = 0.84 < 1.00, OK

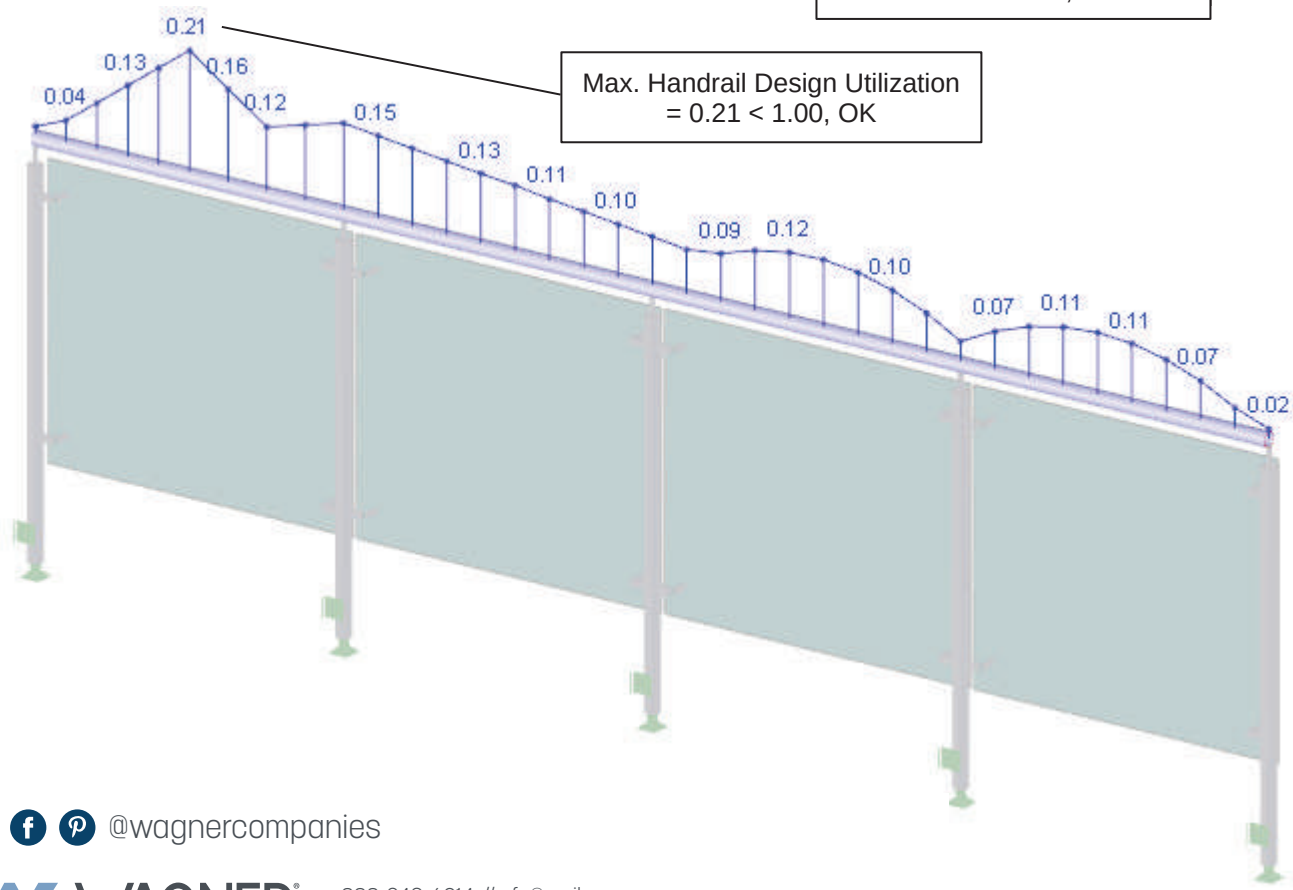

Max. Handrail Design Utilization = 0.21 < 1.00, OK

© 2019 R&B Wagner, Inc. All Rights Reserved.
WagnerArchitectural.com

4.5. Deflection Utilization

4.5.1. Surface Mounted System

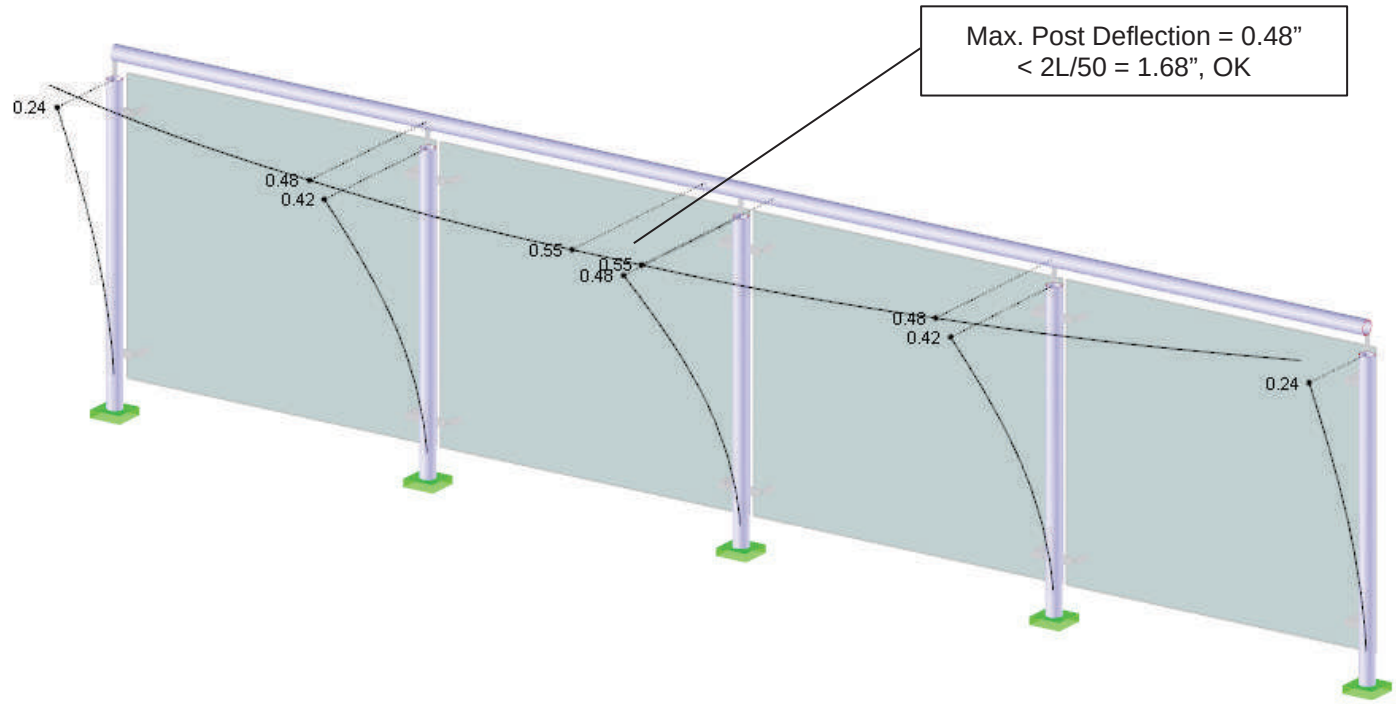

4.5.2. Facia Mounted System

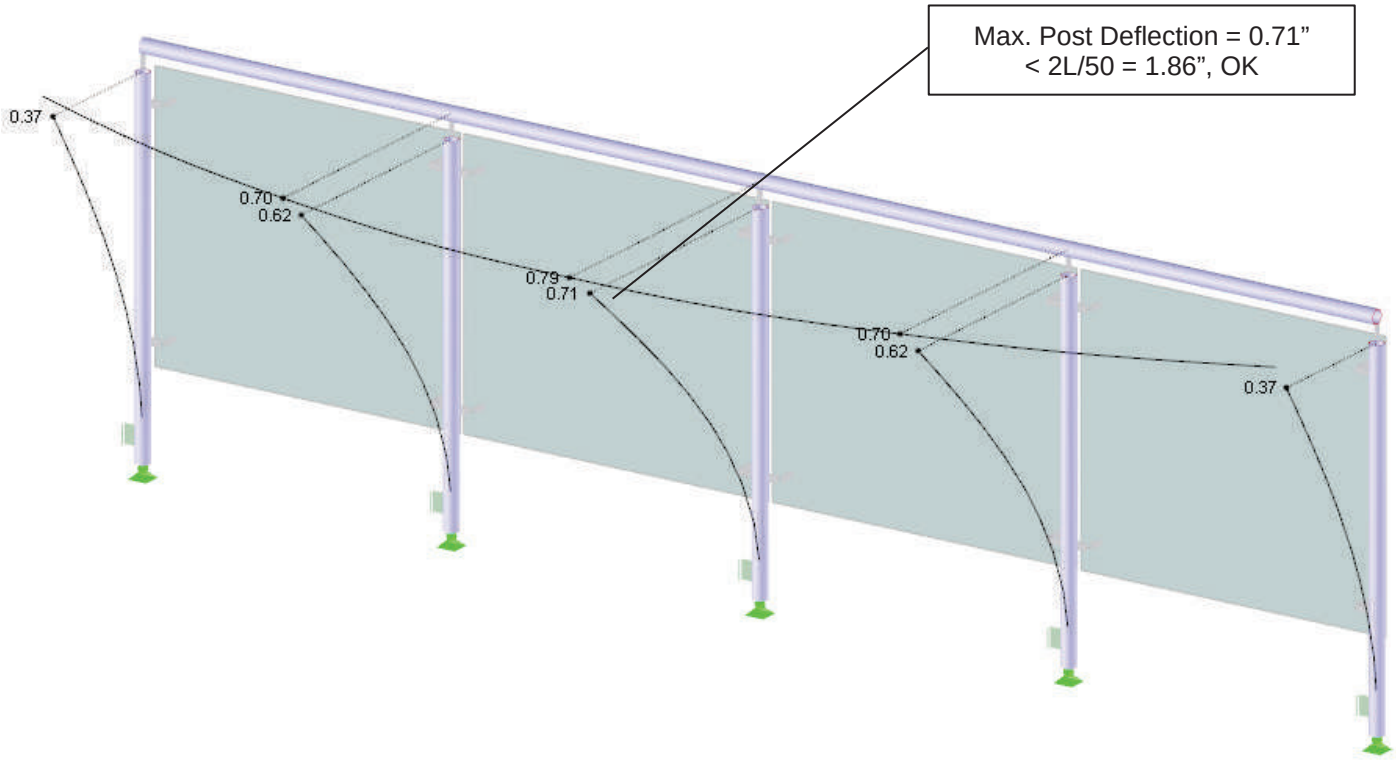

© 2019 R&B Wagner, Inc. All Rights Reserved.
WagnerArchitectural.com

5. Railing Support Design

5.1. Reaction Summary

The following forces (ASD Level) are transferred from analyzed components to the supporting structure designed by others. The supporting structure must be able to withstand these forces. This to be designed by others.

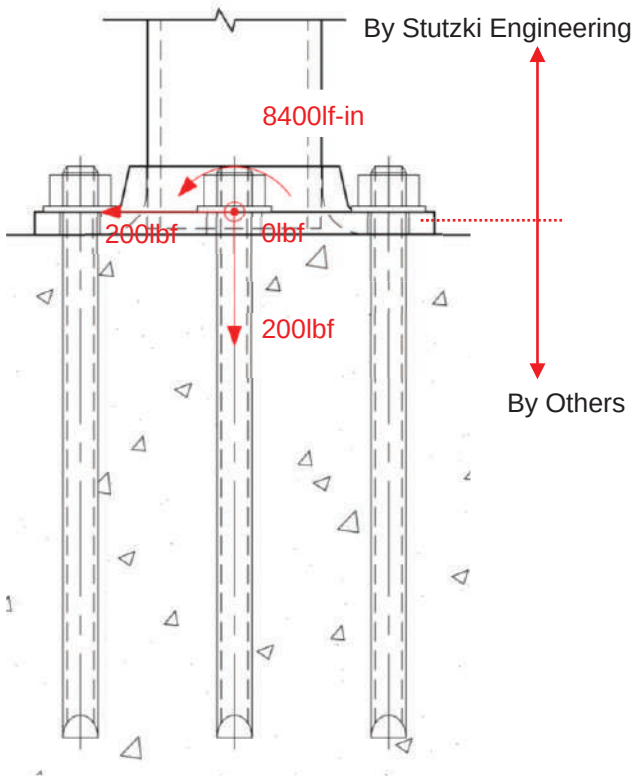

Section View through Surface Mounted Bracket

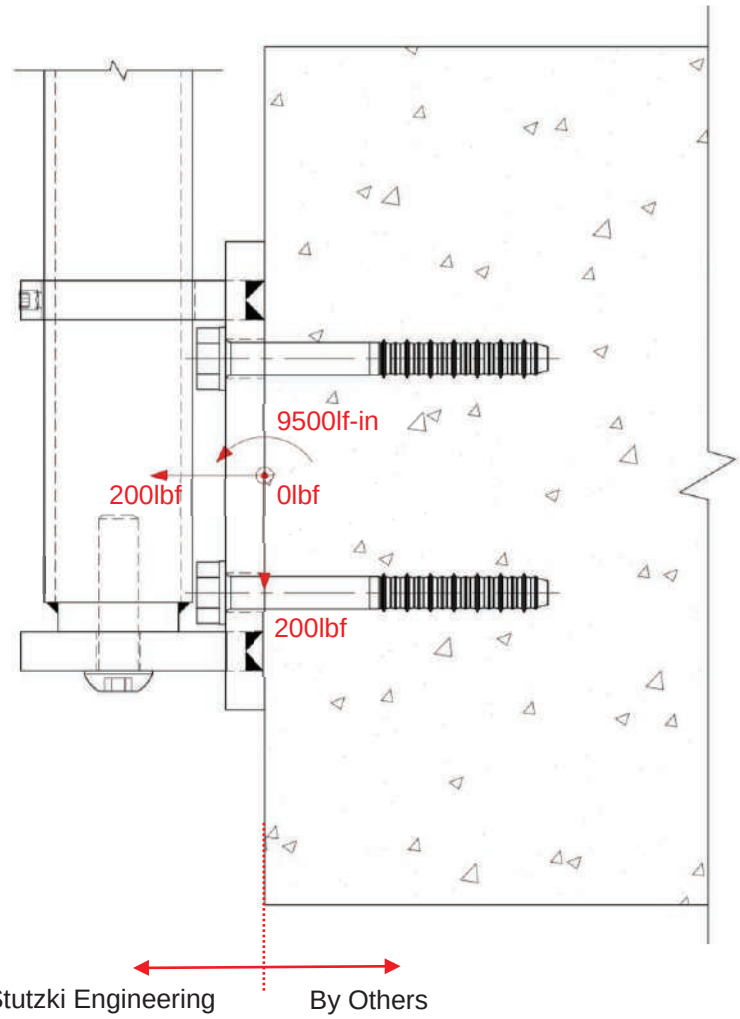

Section View through Facia Mounted Bracket

5.2. Design Criteria

5.2.1. Anchors

Hilti HUS-HR		Fu = 137.75 ksi, min
Hilti HUS-R, 316SS, w/ Hilti HIT-HY 200 Epoxy		Fu = 100 ksi, min

5.2.2. Concrete

Normal Weight Concrete		f'c = 4000psi @ 28 days

5.2.3. Fasteners

316 SS Bolts, Condition A	Fy = 30 ksi, min	Fu = 75 ksi, min
316 SS Bolts, Condition CW	Fy = 65 ksi, min	Fu = 100 ksi, min

5.2.4. Stainless Steel

316 SS	Fy = 30 ksi, min	Fu = 70 ksi, min

5.3. Surface Mounted Bracket Design

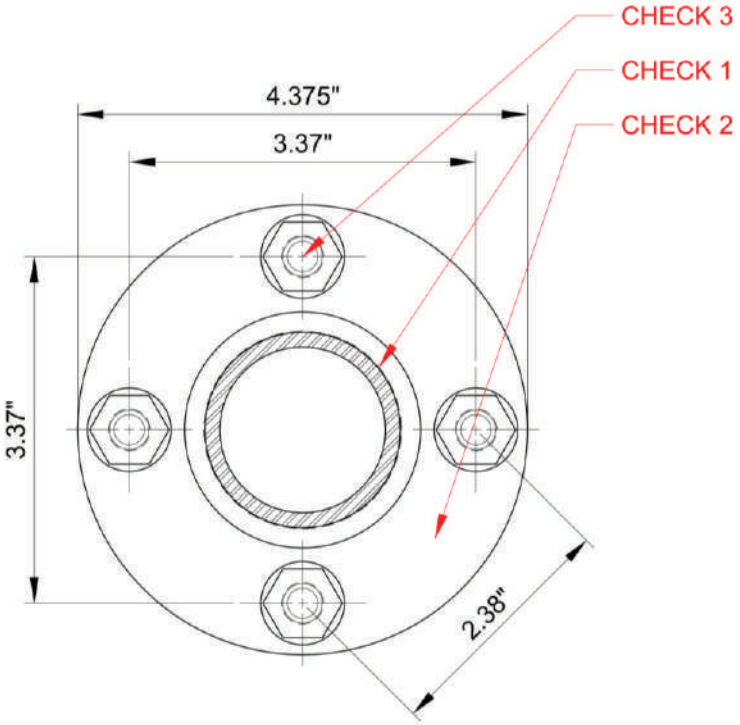

Connection Detail

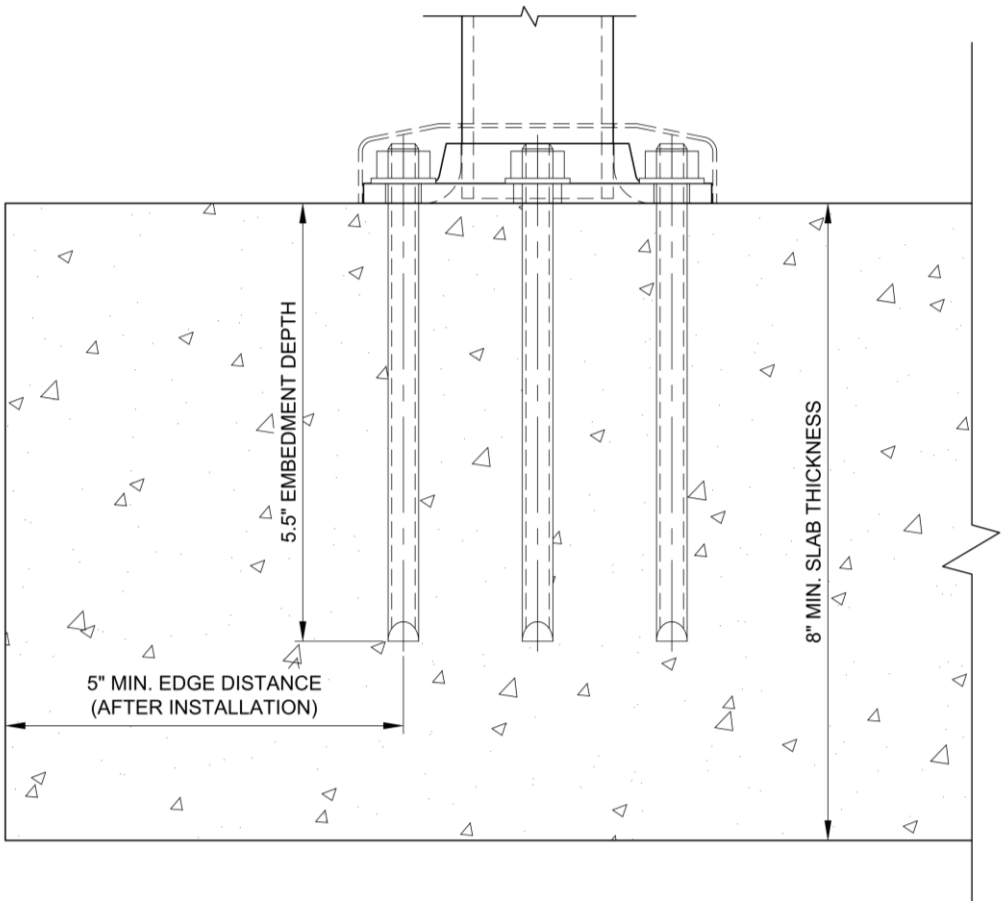

Connection Detail

© 2019 R&B Wagner, Inc. All Rights Reserved.
WagnerArchitectural.com

Loads (ASD)

$DL := 200 \cdot lbf$ $\qquad$ $R := 200 \cdot lbf$

#1 Check Weld

1/4" Fillet Weld, 70ksi Min. Filler Strength, All-Around

Capacity

Capacity OK per Test Report P18-0055C (Heavy Duty Weld Flange Test Report) by Anderson Laboratories, Inc. Refer to Appendix I.

#2 Check Base Plate for Bending

4-3/8" Dia, 1/4" Thick Round Plate, 316 Stainless Steel

Capacity

Capacity OK per Test Report P18-0055C (Heavy Duty Weld Flange Test Report) by Anderson Laboratories, Inc. Refer to Appendix I.

#3 Check Bolt Capacity

(4) - 1/2"-13 Bolts, 316 Stainless Steel, Condition A, Tapped in Min. 3/8" Thick A36 Plate (or Better)

Properties:

$d_{b3} := 0.50 \cdot in$ $\qquad$ $F_{y3} := 30 \cdot ksi$ $\qquad$ $F_{u3} := 75ksi$ $\qquad$ $N_3 := 13 \cdot \frac{1}{in}$

$LE_3 := 0.375 \cdot in$ $\qquad$ $F_{us3} := 58ksi$ $\qquad$ $SF_3 = 2.5$

$$F_{nt3} := \min\left(0.75 \cdot F_{y3}, \frac{1}{SF_3} \cdot F_{u3}\right) = 22.5 \cdot ksi$$

$$F_{nv3} := \min\left(0.75 \cdot F_{y3} \div \sqrt{3}, \frac{1}{SF_3} \cdot F_{u3} \div \sqrt{3}\right) = 12.99 \cdot ksi$$

$$A_{S3} := 0.7854 \cdot \left(d_{b3} - \frac{0.9743}{N_3}\right)^2 = 0.142\, in^2$$

$$A_{R3} := 0.7854 \cdot \left(d_{b3} - \frac{1.2269}{N_3}\right)^2 = 0.129\, in^2$$

Demand

Tension $\qquad$ $T_3 := \frac{R}{2 \cdot Bolts} \cdot \frac{43 \cdot in}{2.375 \cdot in} = 1811\, lbf$

Shear $\qquad$ $V_3 := \frac{R}{2} = 100\, lbf$

Capacity

Tension Capacity $\qquad$ $T_{n3} := F_{nt3} \cdot A_{S3} = 3193 \cdot lbf$

Shear Capacity $\qquad$ $V_{n3} := F_{nv3} \cdot A_{R3} = 1679\, lbf$

Pull-out Capacity

$TSA_{E3} := 0.0600 \cdot in^2$ $\qquad$ $TSA_{I3} := 0.0860 \cdot in^2$

Internal Thread Capacity $\qquad$ Conditions = "Thick"

$$T_{I3} := \frac{LE_3 \cdot N_3 \cdot TSA_{I3} \cdot F_{us3}}{SF_3 \cdot \sqrt{3}} = 5616\, lbf$$

External Thread Capacity

$$T_{E3} := \min\left(\frac{LE_3 \cdot N_3 \cdot TSA_{E3} \cdot F_{u3}}{SF_3 \cdot \sqrt{3}}, \frac{0.75 \cdot LE_3 \cdot N_3 \cdot TSA_{E3} \cdot F_{y3}}{\sqrt{3}}\right) = 3800\, lbf$$

Pull-out Capacity $T_{outn3} := \min(T_{I3}, T_{E3}) = 3800 \cdot lbf$

Interaction

$$IR1_3 := \left(\frac{T_3}{T_{n3}}\right)^2 + \left(\frac{V_3}{V_{n3}}\right)^2 = 0.33 \qquad IR2_3 := \left(\frac{T_3}{T_{outn3}}\right)^2 = 0.23$$

CheckASD3 = "OK"

#3 Check Anchor Capacity

Hilti 3/8" Dia HAS-R, 316SS, Rod w/ Hilti HIT-HY 200 Epoxy

Demand

Anchor Group LRFD Moment $M_3 := 1.6 \cdot R \cdot 43 \cdot in = 13.76\ in \cdot kip$

Anchor Group LRFD Shear $V_3 := 1.6 \cdot R = 320\ lbf$

Anchor Capacity

Design Criteria:

- Concrete Strength f'c = 4000 psi min. @ 28 days
- Normal Weight Concrete
- 8" Slab Thickness
- 5" Min. Anchor Edge Distance (after installation tolerances)
- 5-1/2" Min. Embedment

Capacity is per the attached Hilti software output

© 2019 R&B Wagner, Inc. All Rights Reserved.
WagnerArchitectural.com

www.hilti.us

Profis Anchor 2.8.3

Company:	Stutzki Engineering, Inc.	Page:	1
Specifier:	JC	Project:	2018-208
Address:	241 N Broadway, Suite 302, Milwaukee, WI, 53202	Sub-Project I Pos. No.:	Legato Surface Bracket
Phone I Fax:	414-455-4815 |	Date:	6/29/2019
E-Mail:			

Specifier's comments:

1 Input data

Anchor type and diameter:	**HIT-HY 200 + HAS-R 316 SS 3/8**
Effective embedment depth:	$h_{ef,act}$ = 5.500 in. ($h_{ef,limit}$ = - in.)
Material:	ASTM F 593
Evaluation Service Report:	ESR-3187
Issued I Valid:	3/1/2018 | 3/1/2020
Proof:	Design method ACI 318-14 / Chem
Stand-off installation:	e_b = 0.000 in. (no stand-off); t = 0.250 in.
Anchor plate:	l_x x l_y x t = 4.376 in. x 4.376 in. x 0.250 in.; (Recommended plate thickness: not calculated
Profile:	no profile
Base material:	cracked concrete, 4000, f_c' = 4,000 psi; h = 8.000 in., Temp. short/long: 32/32 °F
Installation:	**hammer drilled hole, Installation condition: Dry**
Reinforcement:	tension: condition B, shear: condition B; no supplemental splitting reinforcement present edge reinforcement: none or < No. 4 bar

[R] - The anchor calculation is based on a rigid anchor plate assumption.

Geometry [in.] & Loading [lb, in.lb]

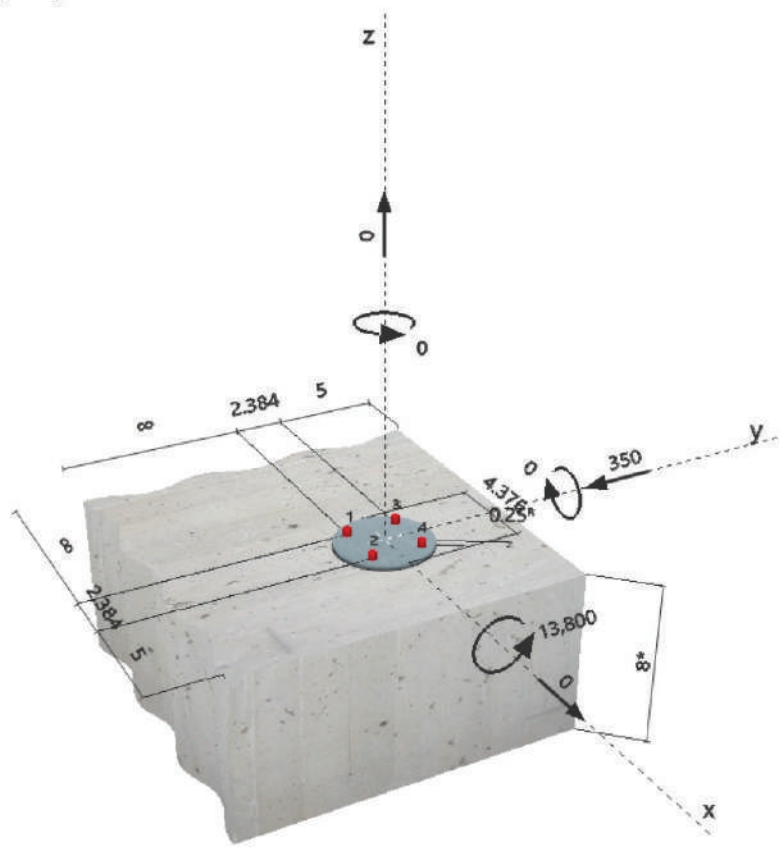

www.hilti.us

Profis Anchor 2.8.3

Company:	Stutzki Engineering, Inc.	Page:	2
Specifier:	JC	Project:	2018-208
Address:	241 N Broadway, Suite 302, Milwaukee, WI, 53202	Sub-Project I Pos. No.:	Legato Surface Bracket
Phone I Fax:	414-455-4815 |	Date:	6/29/2019
E-Mail:			

2 Load case/Resulting anchor forces

Load case: Design loads

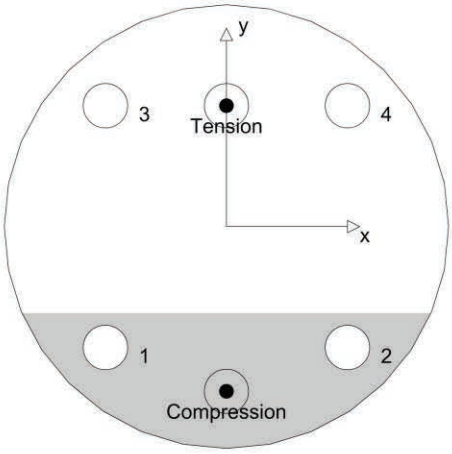

Anchor reactions [lb]
Tension force: (+Tension, -Compression)

Anchor	Tension force	Shear force	Shear force x	Shear force y
1	0	87	0	-87
2	0	87	0	-87
3	2,450	87	0	-87
4	2,450	87	0	-87

max. concrete compressive strain: 0.71 [‰]
max. concrete compressive stress: 3,099 [psi]
resulting tension force in (x/y)=(0.000/1.192): 4,900 [lb]
resulting compression force in (x/y)=(0.000/-1.624): 4,900 [lb]

Anchor forces are calculated based on the assumption of a rigid anchor plate.

3 Tension load

	Load N_{ua} [lb]	Capacity ϕN_n [lb]	Utilization $\beta_N = N_{ua}/\phi N_n$	Status
Steel Strength*	2,450	5,037	49	OK
Bond Strength**	4,900	5,104	97	OK
Sustained Tension Load Bond Strength*	N/A	N/A	N/A	N/A
Concrete Breakout Strength**	4,900	6,048	82	OK

* anchor having the highest loading **anchor group (anchors in tension)

3.1 Steel Strength

N_{sa} = ESR value refer to ICC-ES ESR-3187
$\phi N_{sa} \geq N_{ua}$ ACI 318-14 Table 17.3.1.1

Variables

$A_{se,N}$ [in.^{2}]	f_{uta} [psi]
0.08	100,000

Calculations

N_{sa} [lb]
7,750

Results

N_{sa} [lb]	ϕ_{steel}	ϕN_{sa} [lb]	N_{ua} [lb]
7,750	0.650	5,037	2,450

© 2019 R&B Wagner, Inc. All Rights Reserved.
WagnerArchitectural.com

www.hilti.us

Profis Anchor 2.8.3

Company:	Stutzki Engineering, Inc.	Page:	3
Specifier:	JC	Project:	2018-208
Address:	241 N Broadway, Suite 302, Milwaukee, WI, 53202	Sub-Project I Pos. No.:	Legato Surface Bracket
Phone I Fax:	414-455-4815 |	Date:	6/29/2019
E-Mail:			

3.2 Bond Strength

$N_{ag} = \left(\frac{A_{Na}}{A_{Na0}}\right) \psi_{ec1,Na}\, \psi_{ec2,Na}\, \psi_{ed,Na}\, \psi_{cp,Na}\, N_{ba}$ — ACI 318-14 Eq. (17.4.5.1.b)

$\phi\ N_{ag} \geq N_{ua}$ — ACI 318-14 Table 17.3.1.1

A_{Na} = see ACI 318-14, Section 17.4.5.1, Fig. R 17.4.5.1(b)

$A_{Na0} = (2\ c_{Na})^2$ — ACI 318-14 Eq. (17.4.5.1c)

$c_{Na} = 10\ d_a \sqrt{\frac{\tau_{uncr}}{1100}}$ — ACI 318-14 Eq. (17.4.5.1d)

$\psi_{ec,Na} = \left(\frac{1}{1 + \frac{e'_N}{c_{Na}}}\right) \leq 1.0$ — ACI 318-14 Eq. (17.4.5.3)

$\psi_{ed,Na} = 0.7 + 0.3 \left(\frac{c_{a,min}}{c_{Na}}\right) \leq 1.0$ — ACI 318-14 Eq. (17.4.5.4b)

$\psi_{cp,Na} = \text{MAX}\left(\frac{c_{a,min}}{c_{ac}}, \frac{c_{Na}}{c_{ac}}\right) \leq 1.0$ — ACI 318-14 Eq. (17.4.5.5b)

$N_{ba} = \lambda_a \cdot \tau_{k,c} \cdot \pi \cdot d_a \cdot h_{ef}$ — ACI 318-14 Eq. (17.4.5.2)

Variables

$\tau_{k,c,uncr}$ [psi]	d_a [in.]	h_{ef} [in.]	$c_{a,min}$ [in.]	$\tau_{k,c}$ [psi]
2,327	0.375	5.500	5.000	1,095

$e_{c1,N}$ [in.]	$e_{c2,N}$ [in.]	c_{ac} [in.]	λ_a
0.000	0.000	15.126	1.000

Calculations

c_{Na} [in.]	A_{Na} [in.^{2}]	A_{Na0} [in.^{2}]	$\psi_{ed,Na}$
5.429	133.64	117.91	0.976

$\psi_{ec1,Na}$	$\psi_{ec2,Na}$	$\psi_{cp,Na}$	N_{ba} [lb]
1.000	1.000	1.000	7,097

Results

N_{ag} [lb]	ϕ_{bond}	$\phi\ N_{ag}$ [lb]	N_{ua} [lb]
7,852	0.650	5,104	4,900

© 2019 R&B Wagner, Inc. All Rights Reserved.
WagnerArchitectural.com

www.hilti.us

Profis Anchor 2.8.3

Company:	Stutzki Engineering, Inc.	Page:	4
Specifier:	JC	Project:	2018-208
Address:	241 N Broadway, Suite 302, Milwaukee, WI, 53202	Sub-Project I Pos. No.:	Legato Surface Bracket
Phone I Fax:	414-455-4815 |	Date:	6/29/2019
E-Mail:			

3.3 Concrete Breakout Strength

$N_{cbg} = \left(\frac{A_{Nc}}{A_{Nc0}}\right) \psi_{ec,N}\, \psi_{ed,N}\, \psi_{c,N}\, \psi_{cp,N}\, N_b$ — ACI 318-14 Eq. (17.4.2.1b)

$\phi\ N_{cbg} \geq N_{ua}$ — ACI 318-14 Table 17.3.1.1

A_{Nc} see ACI 318-14, Section 17.4.2.1, Fig. R 17.4.2.1(b)

$A_{Nc0} = 9\, h_{ef}^2$ — ACI 318-14 Eq. (17.4.2.1c)

$\psi_{ec,N} = \left(\frac{1}{1 + \frac{2\, e'_N}{3\, h_{ef}}}\right) \leq 1.0$ — ACI 318-14 Eq. (17.4.2.4)

$\psi_{ed,N} = 0.7 + 0.3 \left(\frac{c_{a,min}}{1.5 h_{ef}}\right) \leq 1.0$ — ACI 318-14 Eq. (17.4.2.5b)

$\psi_{cp,N} = \text{MAX}\left(\frac{c_{a,min}}{c_{ac}}, \frac{1.5 h_{ef}}{c_{ac}}\right) \leq 1.0$ — ACI 318-14 Eq. (17.4.2.7b)

$N_b = k_c\, \lambda_a \sqrt{f'_c}\, h_{ef}^{1.5}$ — ACI 318-14 Eq. (17.4.2.2a)

Variables

h_{ef} [in.]	$e_{c1,N}$ [in.]	$e_{c2,N}$ [in.]	$c_{a,min}$ [in.]	$\psi_{c,N}$
5.500	0.000	0.000	5.000	1.000

c_{ac} [in.]	k_c	λ_a	f'_c [psi]
15.126	17	1.000	4,000

Calculations

A_{Nc} [in.^{2}]	A_{Nc0} [in.^{2}]	$\psi_{ec1,N}$	$\psi_{ec2,N}$	$\psi_{ed,N}$	$\psi_{cp,N}$	N_b [lb]
207.15	272.25	1.000	1.000	0.882	1.000	13,868

Results

N_{cbg} [lb]	$\phi_{concrete}$	$\phi\ N_{cbg}$ [lb]	N_{ua} [lb]
9,305	0.650	6,048	4,900

© 2019 R&B Wagner, Inc. All Rights Reserved.
WagnerArchitectural.com

www.hilti.us

Profis Anchor 2.8.3

Company:	Stutzki Engineering, Inc.	Page:	5
Specifier:	JC	Project:	2018-208
Address:	241 N Broadway, Suite 302, Milwaukee, WI, 53202	Sub-Project I Pos. No.:	Legato Surface Bracket
Phone I Fax:	414-455-4815 |	Date:	6/29/2019
E-Mail:			

4 Shear load

	Load V_{ua} [lb]	Capacity ϕV_n [lb]	Utilization $\beta_V = V_{ua}/\phi V_n$	Status
Steel Strength*	87	2,795	4	OK
Steel failure (with lever arm)*	N/A	N/A	N/A	N/A
Pryout Strength (Bond Strength controls)**	350	13,506	3	OK
Concrete edge failure in direction x+**	350	6,382	6	OK

* anchor having the highest loading **anchor group (relevant anchors)

4.1 Steel Strength

$V_{sa} = (0.6\ A_{se,V}\ f_{uta})$ refer to ICC-ES ESR-3187
$\phi\ V_{steel} \geq V_{ua}$ ACI 318-14 Table 17.3.1.1

Variables

$A_{se,V}$ [in.^{2}]	f_{uta} [psi]	$(0.6\ A_{se,V}\ f_{uta})$ [lb]
0.08	100,000	4,659

Calculations

V_{sa} [lb]
4,659

Results

V_{sa} [lb]	ϕ_{steel}	$\phi\ V_{sa}$ [lb]	V_{ua} [lb]
4,659	0.600	2,795	87

© 2019 R&B Wagner, Inc. All Rights Reserved.
WagnerArchitectural.com

4.2 Pryout Strength (Bond Strength controls)

$V_{cpg} = k_{cp}\left[\left(\frac{A_{Na}}{A_{Na0}}\right) \psi_{ec1,Na}\, \psi_{ec2,Na}\, \psi_{ed,Na}\, \psi_{cp,Na}\, N_{ba}\right]$ — ACI 318-14 Eq. (17.5.3.1b)

$\phi\ V_{cpg} \geq V_{ua}$ — ACI 318-14 Table 17.3.1.1

A_{Na} see ACI 318-14, Section 17.4.5.1, Fig. R 17.4.5.1(b)

$A_{Na0} = (2\ c_{Na})^2$ — ACI 318-14 Eq. (17.4.5.1c)

$c_{Na} = 10\ d_a \sqrt{\frac{\tau_{uncr}}{1100}}$ — ACI 318-14 Eq. (17.4.5.1d)

$\psi_{ec,Na} = \left(\frac{1}{1 + \frac{e_N}{c_{Na}}}\right) \leq 1.0$ — ACI 318-14 Eq. (17.4.5.3)

$\psi_{ed,Na} = 0.7 + 0.3\left(\frac{c_{a,min}}{c_{Na}}\right) \leq 1.0$ — ACI 318-14 Eq. (17.4.5.4b)

$\psi_{cp,Na} = \mathrm{MAX}\left(\frac{c_{a,min}}{c_{ac}}, \frac{c_{Na}}{c_{ac}}\right) \leq 1.0$ — ACI 318-14 Eq. (17.4.5.5b)

$N_{ba} = \lambda_a \cdot \tau_{k,c} \cdot \pi \cdot d_a \cdot h_{ef}$ — ACI 318-14 Eq. (17.4.5.2)

Variables

k_{cp}	$\tau_{k,c,uncr}$ [psi]	d_a [in.]	h_{ef} [in.]	$c_{a,min}$ [in.]	$\tau_{k,c}$ [psi]
2	2,327	0.375	5.500	5.000	1,095

$e_{c1,N}$ [in.]	$e_{c2,N}$ [in.]	c_{ac} [in.]	λ_a
0.000	0.000	15.126	1.000

Calculations

c_{Na} [in.]	A_{Na} [in.^{2}]	A_{Na0} [in.^{2}]	$\psi_{ed,Na}$
5.429	164.18	117.91	0.976

$\psi_{ec1,Na}$	$\psi_{ec2,Na}$	$\psi_{cp,Na}$	N_{ba} [lb]
1.000	1.000	1.000	7,097

Results

V_{cpg} [lb]	$\phi_{concrete}$	$\phi\ V_{cpg}$ [lb]	V_{ua} [lb]
19,295	0.700	13,506	350

© 2019 R&B Wagner, Inc. All Rights Reserved.
WagnerArchitectural.com

4.3 Concrete edge failure in direction x+

$V_{cbg} = \left(\frac{A_{Vc}}{A_{Vc0}}\right) \psi_{ec,V}\, \psi_{ed,V}\, \psi_{c,V}\, \psi_{h,V}\, \psi_{parallel,V}\, V_b$ — ACI 318-14 Eq. (17.5.2.1b)

$\phi\ V_{cbg} \geq V_{ua}$ — ACI 318-14 Table 17.3.1.1

A_{Vc} see ACI 318-14, Section 17.5.2.1, Fig. R 17.5.2.1(b)

$A_{Vc0} = 4.5\, c_{a1}^2$ — ACI 318-14 Eq. (17.5.2.1c)

$\psi_{ec,V} = \left(\frac{1}{1 + \frac{2e_v'}{3c_{a1}}}\right) \leq 1.0$ — ACI 318-14 Eq. (17.5.2.5)

$\psi_{ed,V} = 0.7 + 0.3\left(\frac{c_{a2}}{1.5c_{a1}}\right) \leq 1.0$ — ACI 318-14 Eq. (17.5.2.6b)

$\psi_{h,V} = \sqrt{\frac{1.5c_{a1}}{h_a}} \geq 1.0$ — ACI 318-14 Eq. (17.5.2.8)

$V_b = \left(7\left(\frac{l_e}{d_a}\right)^{0.2} \sqrt{d_a}\right) \lambda_a \sqrt{f_c'}\, c_{a1}^{1.5}$ — ACI 318-14 Eq. (17.5.2.2a)

Variables

c_{a1} [in.]	c_{a2} [in.]	e_{cV} [in.]	$\psi_{c,V}$	h_a [in.]
5.000	5.000	0.000	1.000	8.000

l_e [in.]	λ_a	d_a [in.]	f_c' [psi]	$\psi_{parallel,V}$
3.000	1.000	0.375	4,000	2.000

Calculations

A_{Vc} [in.^{2}]	A_{Vc0} [in.^{2}]	$\psi_{ec,V}$	$\psi_{ed,V}$	$\psi_{h,V}$	V_b [lb]
111.63	112.50	1.000	1.000	1.000	4,594

Results

V_{cbg} [lb]	$\phi_{concrete}$	$\phi\ V_{cbg}$ [lb]	V_{ua} [lb]
9,117	0.700	6,382	350

5 Combined tension and shear loads

β_N	β_V	ζ	Utilization $\beta_{N,V}$ [%]	Status
0.960	0.055	1.000	85	OK

$\beta_{NV} = (\beta_N + \beta_V) / 1.2 <= 1$

6 Warnings

- The anchor design methods in PROFIS Anchor require rigid anchor plates per current regulations (ETAG 001/Annex C, EOTA TR029, etc.). This means load re-distribution on the anchors due to elastic deformations of the anchor plate are not considered - the anchor plate is assumed to be sufficiently stiff, in order not to be deformed when subjected to the design loading. PROFIS Anchor calculates the minimum required anchor plate thickness with FEM to limit the stress of the anchor plate based on the assumptions explained above. The proof if the rigid anchor plate assumption is valid is not carried out by PROFIS Anchor. Input data and results must be checked for agreement with the existing conditions and for plausibility!
- Condition A applies when supplementary reinforcement is used. The Φ factor is increased for non-steel Design Strengths except Pullout Strength and Pryout strength. Condition B applies when supplementary reinforcement is not used and for Pullout Strength and Pryout Strength. Refer to your local standard.
- Design Strengths of adhesive anchor systems are influenced by the cleaning method. Refer to the INSTRUCTIONS FOR USE given in the Evaluation Service Report for cleaning and installation instructions
- Checking the transfer of loads into the base material and the shear resistance are required in accordance with ACI 318 or the relevant standard!
- Installation of Hilti adhesive anchor systems shall be performed by personnel trained to install Hilti adhesive anchors. Reference ACI 318-14, Section 17.8.1.

Fastening meets the design criteria!

5.4. Facia Mounted Bracket Design

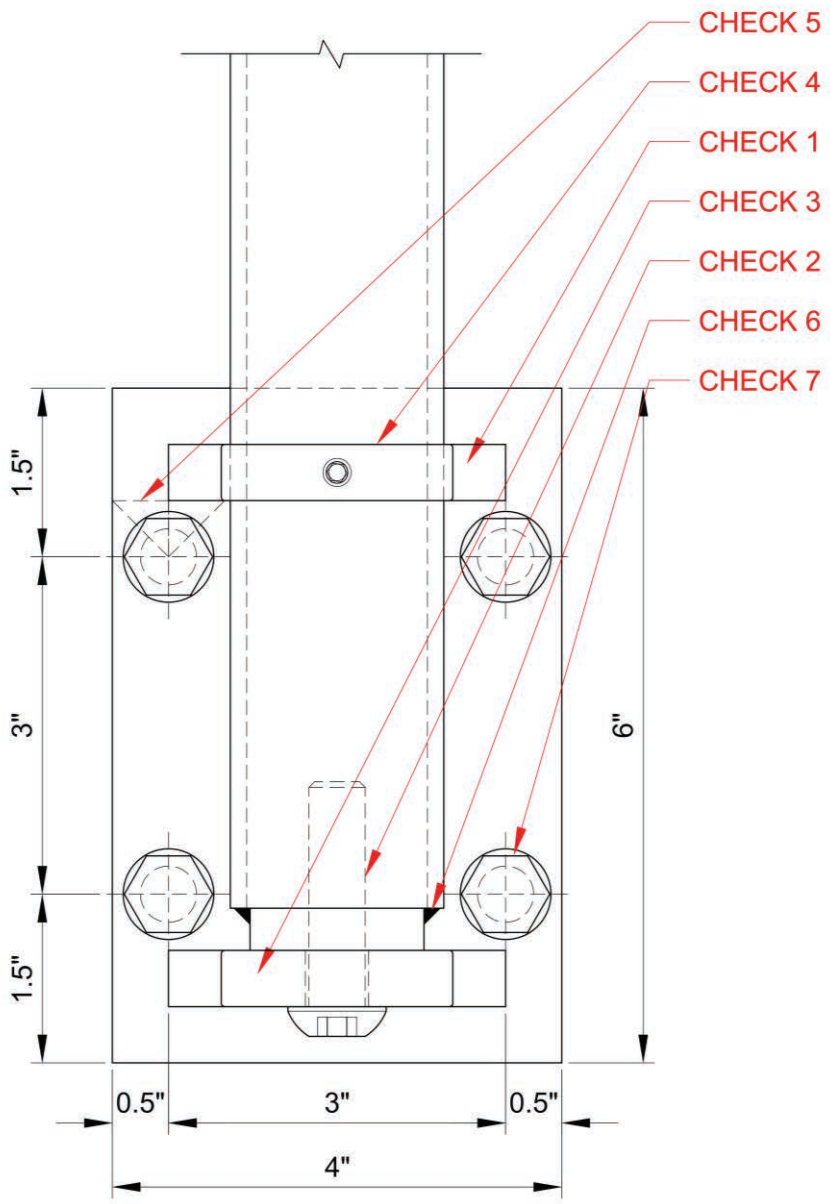

Connection Detail

© 2019 R&B Wagner, Inc. All Rights Reserved.
WagnerArchitectural.com

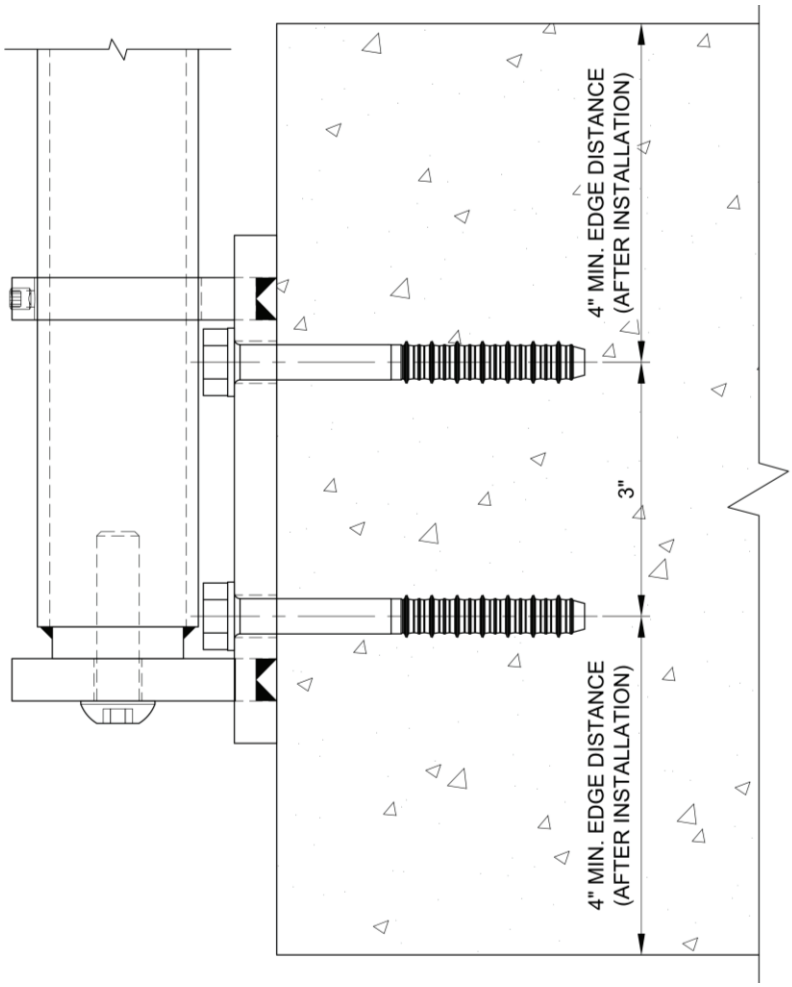

Connection Section View

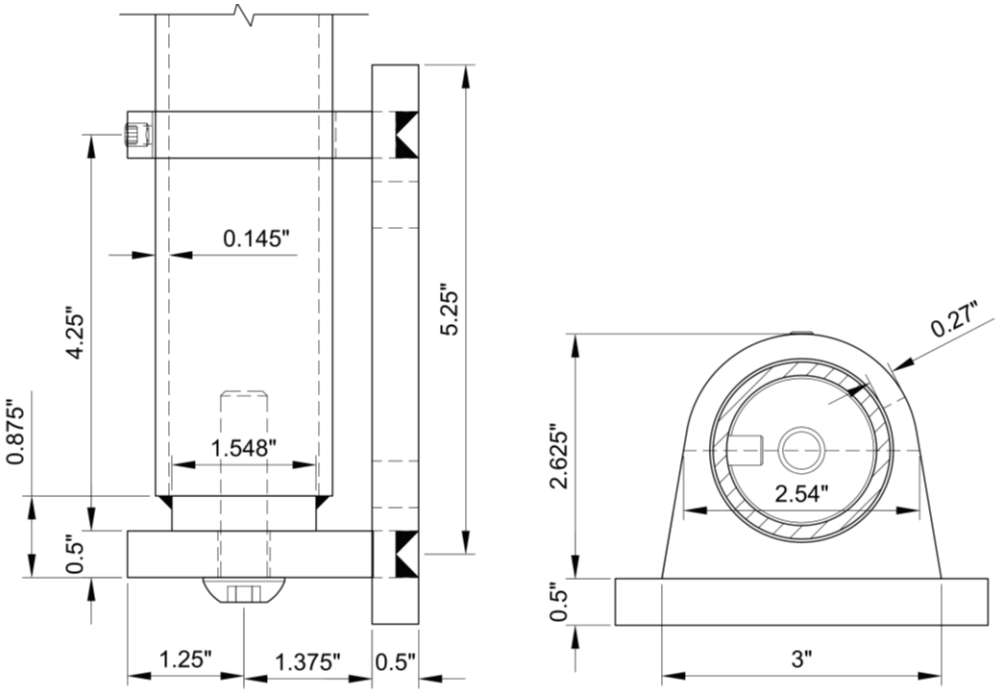

Connection Detail

Loads (ASD)

$DL := 200 \cdot lbf$ $\qquad$ $R := 200 \cdot lbf$

#1 Check Plate for Tension

3" x 2-5/8" x 1/2" Plate, 316 Stainless Steel

Properties:

$t_1 := 0.50 \cdot in$ $\qquad$ $b_1 := 0.266 \cdot in$ $\qquad$ $F_{y1} := 30 \cdot ksi$

$A_{g1} := t_1 \cdot b_1 = 0.13\,in^2$ $\qquad$ $A_{n1} := t_1 \cdot b_1 = 0.13\,in^2$ $\qquad$ $F_{u1} := 70 \cdot ksi$

Force

Tension in Plate Leg $\qquad$ $T_1 := \left(\frac{R}{2 \cdot Legs} \cdot \frac{50.5 \cdot in}{4.25 \cdot in}\right) = 1.19 \cdot kip$

Capacity

Tensile Yielding $\qquad$ $\Omega_1 := 1.67$ $\qquad$ $T_{n1} := \frac{F_{y1} \cdot A_{g1}}{\Omega_1} = 2.39 \cdot kip$

Interaction

$IR1_1 := \frac{T_1}{T_{n1}} = 0.5$ $\qquad$ $\boxed{CheckASD1 = \text{"OK"}}$

#2 Check Bolt Capacity

1/2"-13 Bolts, 316 Stainless Steel, Condition CW

Properties:

$d_{b2} := 0.500 \cdot in$ $\qquad$ $F_{y2} := 65 \cdot ksi$ $\qquad$ $F_{u2} := 100ksi$ $\qquad$ $N_2 := 13 \cdot \frac{1}{in}$

$F_{nt2} := \min\left(0.75 \cdot F_{y2}, \frac{1}{SF_2} \cdot F_{u2}\right) = 40 \cdot ksi$ $\qquad$ $F_{nv2} := \min\left(0.75 \cdot F_{y2} \div \sqrt{3}, \frac{1}{SF_2} \cdot F_{u2} \div \sqrt{3}\right) = 23.09 \cdot ksi$

$A_{S2} := 0.7854 \cdot \left(d_{b2} - \frac{0.9743}{N_2}\right)^2 = 0.142\,in^2$ $\qquad$ $A_{R2} := 0.7854 \cdot \left(d_{b2} - \frac{1.2269}{N_2}\right)^2 = 0.129\,in^2$

Demand

Tension $\qquad$ $T_2 := 0.0 \cdot lbf$

Shear $\qquad$ $V_2 := R \cdot \frac{46.25 \cdot in}{4.25 \cdot in} = 2.18 \cdot kip$

Capacity

Tension Capacity $\qquad$ $T_{n2} := F_{nt2} \cdot A_{S2} = 5676 \cdot lbf$

Shear Capacity $\qquad$ $V_{n2} := F_{nv2} \cdot A_{R2} = 2984\,lbf$

Interaction

$IR1_2 := \left(\frac{T_2}{T_{n2}}\right)^2 + \left(\frac{V_2}{V_{n2}}\right)^2 = 0.53$ $\qquad$ $\boxed{CheckASD2 = \text{"OK"}}$

#3 Check Plate for Bending

3" x 2-5/8" x 1/2" Plate, 316 Stainless Steel

Properties:

$t_3 := 0.50 \cdot in$ $\quad b_3 := 2.54 \cdot in$ $\quad F_{y3} := 30 \cdot ksi$

$Z_{w3} := 0.25 \cdot b_3 \cdot t_3^2 = 0.16\,in^3$ $\quad A_{g3} := t_3 \cdot b_3 = 1.27\,in^2$

Force

Tension $\quad T_3 := \left(R \cdot \frac{46.25 \cdot in}{4.25 \cdot in}\right) = 2.18 \cdot kip$

Weak Axis Moment $\quad M_3 := \left(R \cdot \frac{46.25 \cdot in}{4.25 \cdot in}\right) \cdot 0.25 \cdot in + DL \cdot 1.625 \cdot in = 0.87 \cdot kip \cdot in$

Capacity

$\Omega_3 := 1.67$

Tension $\quad T_{n3} := \frac{F_{y3} \cdot A_{g3}}{\Omega_3} = 22.81 \cdot kip$

Weak Axis Moment $\quad M_{n3} := \frac{F_{y3} \cdot Z_{w3}}{\Omega_3} = 2.85\,in \cdot kip$

Interaction

$$IR1_3 := \frac{T_3}{T_{n3}} + \frac{M_3}{M_{n3}} = 0.4$$

$\boxed{CheckASD3 = \text{"OK"}}$

© 2019 R&B Wagner, Inc. All Rights Reserved.
WagnerArchitectural.com

#4 Check 4-Sided Weld

1/4" Fillet Weld, 70ksi Min. Filler Strength, All-Around

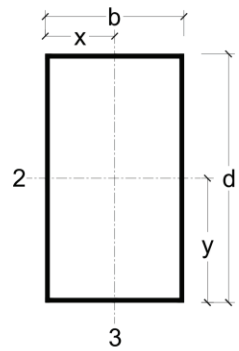

Input

$d_4 := 0.5 \cdot in$ $\qquad$ $b_4 := 3.0 \cdot in$

$y_4 := \frac{d_4}{2} = 0.25\,in$ $\qquad$ $x_4 := \frac{b_4}{2} = 1.5\,in$

Properties

$L_{4w} := 2 \cdot d_4 + 2 \cdot b_4 = 7\,in$

$S_{4w2} := \frac{d_4}{3} \cdot (3 \cdot b_4 + d_4) = 1.58\,in^2$

$S_{4w3} := \frac{b_4}{3} \cdot (3 \cdot d_4 + b_4) = 4.5\,in^2$

$J_{4w} := \frac{(b_4 + d_4)^3}{6} = 7.1\,in^3$

Forces

$N_4 := R \cdot \frac{46.25 \cdot in}{4.25 \cdot in} = 2.18 \cdot kip$ $\qquad$ $V_{4.2} := 0.0 \cdot lbf$ $\qquad$ $V_{4.3} := DL = 200\,lbf$

$T_4 := 0 \cdot kip \cdot in$ $\qquad$ $M_{4.2} := \left(R \cdot \frac{46.25 \cdot in}{4.25 \cdot in}\right) \cdot 0.25 \cdot in + DL \cdot 1.625 \cdot in$ $\qquad$ $M_{4.3} := 0 \cdot kip \cdot in$

Weld Stress

Normal Stress $\qquad$ $F_{wN} := \frac{N_4}{L_{4w}} + \frac{M_{4.2}}{S_{4w2}} + \frac{M_{4.3}}{S_{4w3}} = 0.86 \cdot \frac{kip}{in}$

Shear Stress $\qquad$ $F_{wV} := \sqrt{\left(\frac{V_{4.3}}{L_{4w}} + \frac{T_4 \cdot x_4}{J_{4w}}\right)^2 + \left(\frac{V_{4.2}}{L_{4w}} + \frac{T_4 \cdot y_4}{J_{4w}}\right)^2} = 0.03 \cdot \frac{kip}{in}$

Total Stress $\qquad$ $F_{w4} := \sqrt{F_{wN}^2 + F_{wV}^2}$ $\qquad$ $\boxed{F_{w4} = 0.86 \cdot \frac{kip}{in}}$

Capacity

Weld filler metal tensile strength $\qquad$ $F_{E4} := 70 \cdot ksi$

Effective Weld Throat $\qquad$ $E4 := \frac{\sqrt{2}}{2} \cdot \left(\frac{4}{16}\right) in = 0.18 \cdot in$ $\qquad$ $\Omega_4 := 2.7$

Allowable Stress $\qquad$ $f_{w4} := 0.6 \cdot F_{E4} \cdot E4 = 7.42 \cdot \frac{kip}{in}$ $\qquad$ $\boxed{\frac{f_{w4}}{\Omega_4} = 2.75 \cdot \frac{kip}{in}}$

Interaction

$IR1_4 := F_{w4} \div \frac{f_{w4}}{\Omega_4} = 0.31$ $\qquad$ $\boxed{CheckASD4 = \text{"OK"}}$

© 2019 R&B Wagner, Inc. All Rights Reserved.
WagnerArchitectural.com

#5 Check Base Plate for Bending

6" x 4" x 1/2" Plate, 316 Stainless Steel

Properties:

$t_5 := 0.50 \cdot in$ $\quad b_5 := 1.0 \cdot in$ $\quad F_{y5} := 30 \cdot ksi$ $\quad Z_{w5} := 0.25 \cdot b_5 \cdot t_5^2 = 0.06\,in^3$

Force

Bolt Tension $\quad T_5 := \left(\frac{R}{2 \cdot Bolts} \cdot \frac{50 \cdot in}{3.0 \cdot in}\right) = 1.67 \cdot kip$

Weak Axis Moment $\quad M_5 := T_5 \cdot 0.5 \cdot in = 0.83 \cdot kip \cdot in$

Capacity

$\Omega_5 := 1.67$

Weak Axis Moment $\quad M_{n5} := \frac{F_{y5} \cdot Z_{w5}}{\Omega_5} = 1.12\,in \cdot kip$

Interaction

$IR1_5 := \frac{M_5}{M_{n5}} = 0.74$

CheckASD5 = "OK"

© 2019 R&B Wagner, Inc. All Rights Reserved.
WagnerArchitectural.com

#6 Check Circular Weld

1/8" Fillet Weld, 70ksi Min. Filler Strength

Input

$d_6 := 1.55in$ $\qquad r_6 := \frac{d_6}{2} = 0.78\,in$

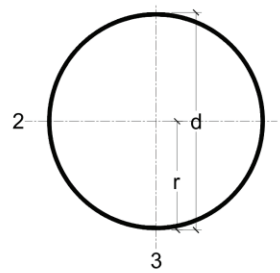

Properties

$L_{6w} := 2 \cdot \pi \cdot r_6 = 4.87\,in$

$S_{6w} := 2 \cdot \pi \cdot r_6^2 = 3.77\,in^2$

$J_{6w} := 2 \cdot \pi \cdot r_6^3 = 2.9\,in^3$

Forces

$N_6 := 0 \cdot kip$ $\qquad V_{6.2} := R \cdot \frac{46.25 \cdot in}{4.25 \cdot in} = 2.18 \cdot kip$ $\qquad V_{6.3} := 0 \cdot kip$

$T_6 := 0 \cdot kip \cdot in$ $\qquad M_{6.2} := 0 \cdot kip \cdot in$ $\qquad M_{6.3} := V_{6.2} \cdot 0.375 \cdot in = 0.82\,in \cdot kip$

$M_6 := \sqrt{M_{6.2}^2 + M_{6.3}^2} = 0.82\,in \cdot kip$

$V_6 := \sqrt{V_{6.2}^2 + V_{6.3}^2} = 2.18 \cdot kip$

Weld Stress

Normal Stress $\qquad F_{wN} := \frac{N_6}{L_{6w}} + \frac{M_6}{S_{6w}} = 0.22 \cdot \frac{kip}{in}$

Shear Stress $\qquad F_{wV} := \frac{V_6}{L_{6w}} + \frac{T_6 \cdot r_6}{J_{6w}} = 0.45 \cdot \frac{kip}{in}$

Total Stress $\qquad F_{w6} := \sqrt{F_{wN}^2 + F_{wV}^2}$ $\qquad \boxed{F_{w6} = 0.5 \cdot \frac{kip}{in}}$

Capacity

Weld filler metal tensile strength $\qquad F_{E6} := 70 \cdot ksi$

Effective Weld Throat $\qquad E6 := \left(\frac{2}{16} \cdot in\right) \cdot \frac{\sqrt{2}}{2} = 0.09 \cdot in$ $\qquad \Omega_6 := 2.7$

Allowable Stress $\qquad f_{w6} := 0.6 \cdot F_{E6} \cdot E6 = 3.71 \cdot \frac{kip}{in}$ $\qquad \boxed{\frac{f_{w6}}{\Omega_6} = 1.37 \cdot \frac{kip}{in}}$

Interaction

$IR1_6 := F_{w6} \div \frac{f_{w6}}{\Omega_6} = 0.36$ $\qquad$ CheckASD6 = "OK"

© 2019 R&B Wagner, Inc. All Rights Reserved.
WagnerArchitectural.com

#7 Check Bolt Capacity

(4) - 1/2"-13 Bolts, 316 Stainless Steel, Condition A

Properties:

$d_{b7} := 0.500 \cdot in$ $\quad F_{y7} := 30 \cdot ksi$ $\quad F_{u7} := 75ksi$ $\quad N_7 := 13 \cdot \frac{1}{in}$

$LE_7 := 0.375 \cdot in$ $\quad F_{us7} := 58ksi$ $\quad SF_7 = 2.5$

$F_{nt7} := \min\left(0.75 \cdot F_{y7}, \frac{1}{SF_7} \cdot F_{u7}\right) = 22.5 \cdot ksi$ $\quad F_{nv7} := \min\left(0.75 \cdot F_{y7} \div \sqrt{3}, \frac{1}{SF_7} \cdot F_{u7} \div \sqrt{3}\right) = 12.99 \cdot ksi$

$A_{S7} := 0.7854 \cdot \left(d_{b7} - \frac{0.9743}{N_7}\right)^2 = 0.142\, in^2$ $\quad A_{R7} := 0.7854 \cdot \left(d_{b7} - \frac{1.2269}{N_7}\right)^2 = 0.129\, in^2$

Demand

Tension $\quad T_7 := \frac{R}{2 \cdot Bolts} \cdot \frac{50 \cdot in}{3 \cdot in} = 1667\, lbf$

Shear $\quad V_7 := \frac{DL}{2 \cdot Bolts} = 100\, lbf$

Capacity

Tension Capacity $\quad T_{n7} := F_{nt7} \cdot A_{S7} = 3193 \cdot lbf$

Shear Capacity $\quad V_{n7} := F_{nv7} \cdot A_{R7} = 1679\, lbf$

Pull-out Capacity

$TSA_{E7} := 0.0600 \cdot in^2$ $\quad TSA_{I7} := 0.0860 \cdot in^2$

Internal Thread Capacity $\quad$ Conditions = "Thick"

$$T_{I7} := \frac{LE_7 \cdot N_7 \cdot TSA_{I7} \cdot F_{us7}}{SF_7 \cdot \sqrt{3}} = 5616\, lbf$$

External Thread Capacity

$$T_{E7} := \min\left(\frac{LE_7 \cdot N_7 \cdot TSA_{E7} \cdot F_{u7}}{SF_7 \cdot \sqrt{3}}, \frac{0.75 \cdot LE_7 \cdot N_7 \cdot TSA_{E7} \cdot F_{y7}}{\sqrt{3}}\right) = 3800\, lbf$$

Pull-out Capacity $\quad T_{outn7} := \min(T_{I7}, T_{E7}) = 3800 \cdot lbf$

Interaction

$$IR1_7 := \left(\frac{T_7}{T_{n7}}\right)^2 + \left(\frac{V_7}{V_{n7}}\right)^2 = 0.28 \qquad IR2_7 := \frac{T_7}{T_{outn7}} = 0.44$$

CheckASD7 = "OK"

© 2019 R&B Wagner, Inc. All Rights Reserved.
WagnerArchitectural.com

#7 Check Anchor Capacity

Hilti HUS-HR M10, SS Anchor

Demand

Anchor Group LRFD Moment $M_7 := 1.6 \cdot R \cdot 47.5 \cdot in = 15.2\, in \cdot kip$

Anchor Group LRFD Shear $V_7 := 1.6 \cdot DL = 320\, lbf$

Anchor Capacity

Design Criteria:

- Concrete Strength f'c = 4000 psi min. @ 28 days
- Normal Weight Concrete
- Uncracked Concrete Condition
- 6" Slab Thickness
- 4" Min. Anchor Edge Distance (after installation tolerances)
- 3.563" Min. Embedment

Capacity is per the attached Hilti software output

© 2019 R&B Wagner, Inc. All Rights Reserved.
WagnerArchitectural.com

www.hilti.us

Profis Anchor 2.8.1

Company:	Stutzki Engineering, Inc.	Page:	1
Specifier:	JC	Project:	2018-208
Address:	241 N Broadway, Suite 302, Milwaukee, WI, 53202	Sub-Project I Pos. No.:	Legato Facia Bracket
Phone I Fax:	414-455-4815 |	Date:	5/22/2019
E-Mail:			

Specifier's comments:

1 Input data

Anchor type and diameter:	**HUS-HR M10x130**
Effective embedment depth:	$h_{ef,act}$ = 2.800 in., h_{nom} = 3.563 in.
Material:	A4
Evaluation Service Report:	Hilti Technical Data
Issued I Valid:	- | -
Proof:	Design method ACI 318-14 / Mech.
Stand-off installation:	e_b = 0.000 in. (no stand-off); t = 0.500 in.
Anchor plate:	l_x x l_y x t = 4.000 in. x 6.000 in. x 0.500 in.; (Recommended plate thickness: not calculated
Profile:	no profile
Base material:	uncracked concrete, 4000, f_c' = 4,000 psi; h = 6.000 in.
Installation:	**hammer drilled hole, Installation condition: Dry**
Reinforcement:	tension: condition B, shear: condition B; no supplemental splitting reinforcement present edge reinforcement: none or < No. 4 bar

[R] - The anchor calculation is based on a rigid anchor plate assumption.

Geometry [in.] & Loading [lb, in.lb]

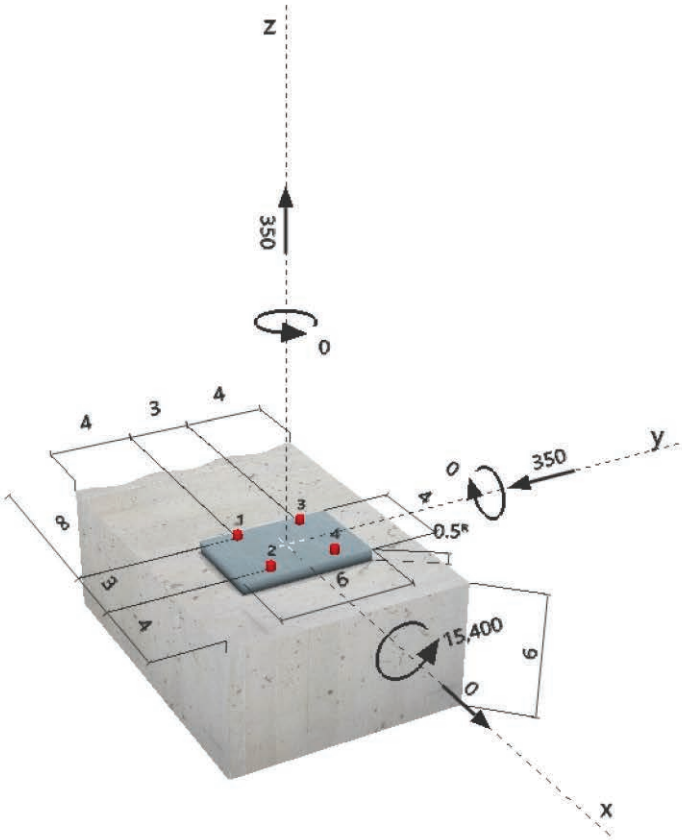

www.hilti.us

Profis Anchor 2.8.1

Company:	Stutzki Engineering, Inc.	Page:	2
Specifier:	JC	Project:	2018-208
Address:	241 N Broadway, Suite 302, Milwaukee, WI, 53202	Sub-Project I Pos. No.:	Legato Facia Bracket
Phone I Fax:	414-455-4815 |	Date:	5/22/2019
E-Mail:			

2 Load case/Resulting anchor forces

Load case: Design loads

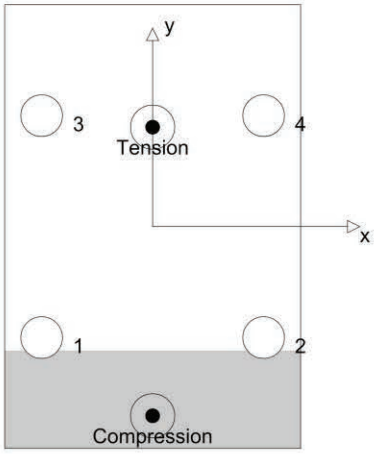

Anchor reactions [lb]
Tension force: (+Tension, -Compression)

Anchor	Tension force	Shear force	Shear force x	Shear force y
1	108	87	0	-87
2	108	87	0	-87
3	1,980	87	0	-87
4	1,980	87	0	-87

max. concrete compressive strain: 0.33 [‰]
max. concrete compressive stress: 1,443 [psi]
resulting tension force in (x/y)=(0.000/1.344): 4,176 [lb]
resulting compression force in (x/y)=(0.000/-2.558): 3,826 [lb]

Anchor forces are calculated based on the assumption of a rigid anchor plate.

3 Tension load

	Load N_{ua} [lb]	Capacity ϕN_n [lb]	Utilization $\beta_N = N_{ua}/\phi N_n$	Status
Steel Strength*	1,980	7,689	26	OK
Pullout Strength*	N/A	N/A	N/A	N/A
Concrete Breakout Strength**	4,176	4,296	98	OK

* anchor having the highest loading **anchor group (anchors in tension)

3.1 Steel Strength

N_{sa} = Value refer to Hilti Technical Data
$\phi N_{sa} \geq N_{ua}$ ACI 318-14 Table 17.3.1.1

Variables

$A_{se,N}$ [in.^{2}]	f_{uta} [psi]
0.09	137,750

Calculations

N_{sa} [lb]
11,830

Results

N_{sa} [lb]	ϕ_{steel}	ϕN_{sa} [lb]	N_{ua} [lb]
11,830	0.650	7,689	1,980

© 2019 R&B Wagner, Inc. All Rights Reserved.
WagnerArchitectural.com

Company:	Stutzki Engineering, Inc.	Page:	3
Specifier:	JC	Project:	2018-208
Address:	241 N Broadway, Suite 302, Milwaukee, WI, 53202	Sub-Project I Pos. No.:	Legato Facia Bracket
Phone I Fax:	414-455-4815 |	Date:	5/22/2019
E-Mail:			

3.2 Concrete Breakout Strength

$N_{cbg} = \left(\frac{A_{Nc}}{A_{Nc0}}\right) \psi_{ec,N}\, \psi_{ed,N}\, \psi_{c,N}\, \psi_{cp,N}\, N_b$ — ACI 318-14 Eq. (17.4.2.1b)

$\phi\ N_{cbg} \geq N_{ua}$ — ACI 318-14 Table 17.3.1.1

A_{Nc} see ACI 318-14, Section 17.4.2.1, Fig. R 17.4.2.1(b)

$A_{Nc0} = 9\, h_{ef}^2$ — ACI 318-14 Eq. (17.4.2.1c)

$\psi_{ec,N} = \left(\frac{1}{1 + \frac{2\, e'_N}{3\, h_{ef}}}\right) \leq 1.0$ — ACI 318-14 Eq. (17.4.2.4)

$\psi_{ed,N} = 0.7 + 0.3 \left(\frac{c_{a,min}}{1.5 h_{ef}}\right) \leq 1.0$ — ACI 318-14 Eq. (17.4.2.5b)

$\psi_{cp,N} = \text{MAX}\left(\frac{c_{a,min}}{c_{ac}}, \frac{1.5 h_{ef}}{c_{ac}}\right) \leq 1.0$ — ACI 318-14 Eq. (17.4.2.7b)

$N_b = k_c\, \lambda_a \sqrt{f'_c}\, h_{ef}^{1.5}$ — ACI 318-14 Eq. (17.4.2.2a)

Variables

h_{ef} [in.]	$e_{c1,N}$ [in.]	$e_{c2,N}$ [in.]	$c_{a,min}$ [in.]	$\psi_{c,N}$
2.667	0.000	1.344	4.000	1.000

c_{ac} [in.]	k_c	λ_a	f'_c [psi]
5.030	24	1.000	4,000

Calculations

A_{Nc} [in.^{2}]	A_{Nc0} [in.^{2}]	$\psi_{ec1,N}$	$\psi_{ec2,N}$	$\psi_{ed,N}$	$\psi_{cp,N}$	N_b [lb]
121.00	64.00	1.000	0.748	1.000	0.835	6,610

Results

N_{cbg} [lb]	$\phi_{concrete}$	$\phi\ N_{cbg}$ [lb]	N_{ua} [lb]
7,810	0.550	4,296	4,176

© 2019 R&B Wagner, Inc. All Rights Reserved.
WagnerArchitectural.com

4 Shear load

	Load V_{ua} [lb]	Capacity ϕV_n [lb]	Utilization $\beta_V = V_{ua}/\phi V_n$	Status
Steel Strength*	87	2,982	3	OK
Steel failure (with lever arm)*	N/A	N/A	N/A	N/A
Pryout Strength**	350	14,609	3	OK
Concrete edge failure in direction y-**	350	3,144	12	OK

* anchor having the highest loading **anchor group (relevant anchors)

4.1 Steel Strength

V_{sa} = Value refer to Hilti Technical Data

$\phi\ V_{steel} \geq V_{ua}$ ACI 318-14 Table 17.3.1.1

Variables

$A_{se,V}$ [in.^{2}]	f_{uta} [psi]
0.09	137,750

Calculations

V_{sa} [lb]
4,970

Results

V_{sa} [lb]	ϕ_{steel}	$\phi\ V_{sa}$ [lb]	V_{ua} [lb]
4,970	0.600	2,982	87

4.2 Pryout Strength

$V_{cpg} = k_{cp}\left[\left(\frac{A_{Nc}}{A_{Nc0}}\right)\psi_{ec,N}\,\psi_{ed,N}\,\psi_{c,N}\,\psi_{cp,N}\,N_b\right]$ ACI 318-14 Eq. (17.5.3.1b)

$\phi\ V_{cpg} \geq V_{ua}$ ACI 318-14 Table 17.3.1.1

A_{Nc} see ACI 318-14, Section 17.4.2.1, Fig. R 17.4.2.1(b)

$A_{Nc0} = 9\,h_{ef}^2$ ACI 318-14 Eq. (17.4.2.1c)

$\psi_{ec,N} = \left(\frac{1}{1+\frac{2\,e_N'}{3\,h_{ef}}}\right) \leq 1.0$ ACI 318-14 Eq. (17.4.2.4)

$\psi_{ed,N} = 0.7 + 0.3\left(\frac{c_{a,min}}{1.5h_{ef}}\right) \leq 1.0$ ACI 318-14 Eq. (17.4.2.5b)

$\psi_{cp,N} = \mathrm{MAX}\left(\frac{c_{a,min}}{c_{ac}}, \frac{1.5h_{ef}}{c_{ac}}\right) \leq 1.0$ ACI 318-14 Eq. (17.4.2.7b)

$N_b = k_c\,\lambda_a\,\sqrt{f_c'}\,h_{ef}^{1.5}$ ACI 318-14 Eq. (17.4.2.2a)

Variables

k_{cp}	h_{ef} [in.]	$e_{c1,N}$ [in.]	$e_{c2,N}$ [in.]	$c_{a,min}$ [in.]
2	2.667	0.000	0.000	4.000

$\psi_{c,N}$	c_{ac} [in.]	k_c	λ_a	f_c' [psi]
1.000	5.030	24	1.000	4,000

Calculations

A_{Nc} [in.^{2}]	A_{Nc0} [in.^{2}]	$\psi_{ec1,N}$	$\psi_{ec2,N}$	$\psi_{ed,N}$	$\psi_{cp,N}$	N_b [lb]
121.00	64.00	1.000	1.000	1.000	0.835	6,610

Results

V_{cpg} [lb]	$\phi_{concrete}$	$\phi\ V_{cpg}$ [lb]	V_{ua} [lb]
20,869	0.700	14,609	350

4.3 Concrete edge failure in direction y-

$V_{cbg} = \left(\frac{A_{Vc}}{A_{Vc0}}\right) \psi_{ec,V}\, \psi_{ed,V}\, \psi_{c,V}\, \psi_{h,V}\, \psi_{parallel,V}\, V_b$ — ACI 318-14 Eq. (17.5.2.1b)

$\phi\ V_{cbg} \geq V_{ua}$ — ACI 318-14 Table 17.3.1.1

A_{Vc} see ACI 318-14, Section 17.5.2.1, Fig. R 17.5.2.1(b)

$A_{Vc0} = 4.5\, c_{a1}^2$ — ACI 318-14 Eq. (17.5.2.1c)

$\psi_{ec,V} = \left(\frac{1}{1 + \frac{2e_v'}{3c_{a1}}}\right) \leq 1.0$ — ACI 318-14 Eq. (17.5.2.5)

$\psi_{ed,V} = 0.7 + 0.3\left(\frac{c_{a2}}{1.5c_{a1}}\right) \leq 1.0$ — ACI 318-14 Eq. (17.5.2.6b)

$\psi_{h,V} = \sqrt{\frac{1.5c_{a1}}{h_a}} \geq 1.0$ — ACI 318-14 Eq. (17.5.2.8)

$V_b = \left(7\left(\frac{l_e}{d_a}\right)^{0.2} \sqrt{d_a}\right) \lambda_a \sqrt{f_c'}\, c_{a1}^{1.5}$ — ACI 318-14 Eq. (17.5.2.2a)

Variables

c_{a1} [in.]	c_{a2} [in.]	e_{cV} [in.]	$\psi_{c,V}$	h_a [in.]
4.000	4.000	0.000	1.400	6.000

l_e [in.]	λ_a	d_a [in.]	f_c' [psi]	$\psi_{parallel,V}$
2.800	1.000	0.394	4,000	1.000

Calculations

A_{Vc} [in.^{2}]	A_{Vc0} [in.^{2}]	$\psi_{ec,V}$	$\psi_{ed,V}$	$\psi_{h,V}$	V_b [lb]
78.00	72.00	1.000	0.900	1.000	3,290

Results

V_{cbg} [lb]	$\phi_{concrete}$	$\phi\ V_{cbg}$ [lb]	V_{ua} [lb]
4,491	0.700	3,144	350

5 Combined tension and shear loads

β_N	β_V	ζ	Utilization $\beta_{N,V}$ [%]	Status
0.972	0.111	1.000	91	OK

$\beta_{NV} = (\beta_N + \beta_V) / 1.2 <= 1$

6 Warnings

- The anchor design methods in PROFIS Anchor require rigid anchor plates per current regulations (ETAG 001/Annex C, EOTA TR029, etc.). This means load re-distribution on the anchors due to elastic deformations of the anchor plate are not considered - the anchor plate is assumed to be sufficiently stiff, in order not to be deformed when subjected to the design loading. PROFIS Anchor calculates the minimum required anchor plate thickness with FEM to limit the stress of the anchor plate based on the assumptions explained above. The proof if the rigid anchor plate assumption is valid is not carried out by PROFIS Anchor. Input data and results must be checked for agreement with the existing conditions and for plausibility!
- Condition A applies when supplementary reinforcement is used. The Φ factor is increased for non-steel Design Strengths except Pullout Strength and Pryout strength. Condition B applies when supplementary reinforcement is not used and for Pullout Strength and Pryout Strength. Refer to your local standard.
- Refer to the manufacturer's product literature for cleaning and installation instructions.
- Checking the transfer of loads into the base material and the shear resistance are required in accordance with ACI 318 or the relevant standard!
- Hilti post-installed anchors shall be installed in accordance with the Hilti Manufacturer's Printed Installation Instructions (MPII). Reference ACI 318-14, Section 17.8.1.

Fastening meets the design criteria!

6. Railing Connection Design

6.1. Design Criteria

6.1.1. Fasteners

A4-50 Bolts,	Fy = 210 MPa, min	Fu = 500 MPa, min

6.1.2. Stainless Steel

316 SS	Fy = 30 ksi, min	Fu = 70 ksi, min

6.2. Overall Geometry and Location

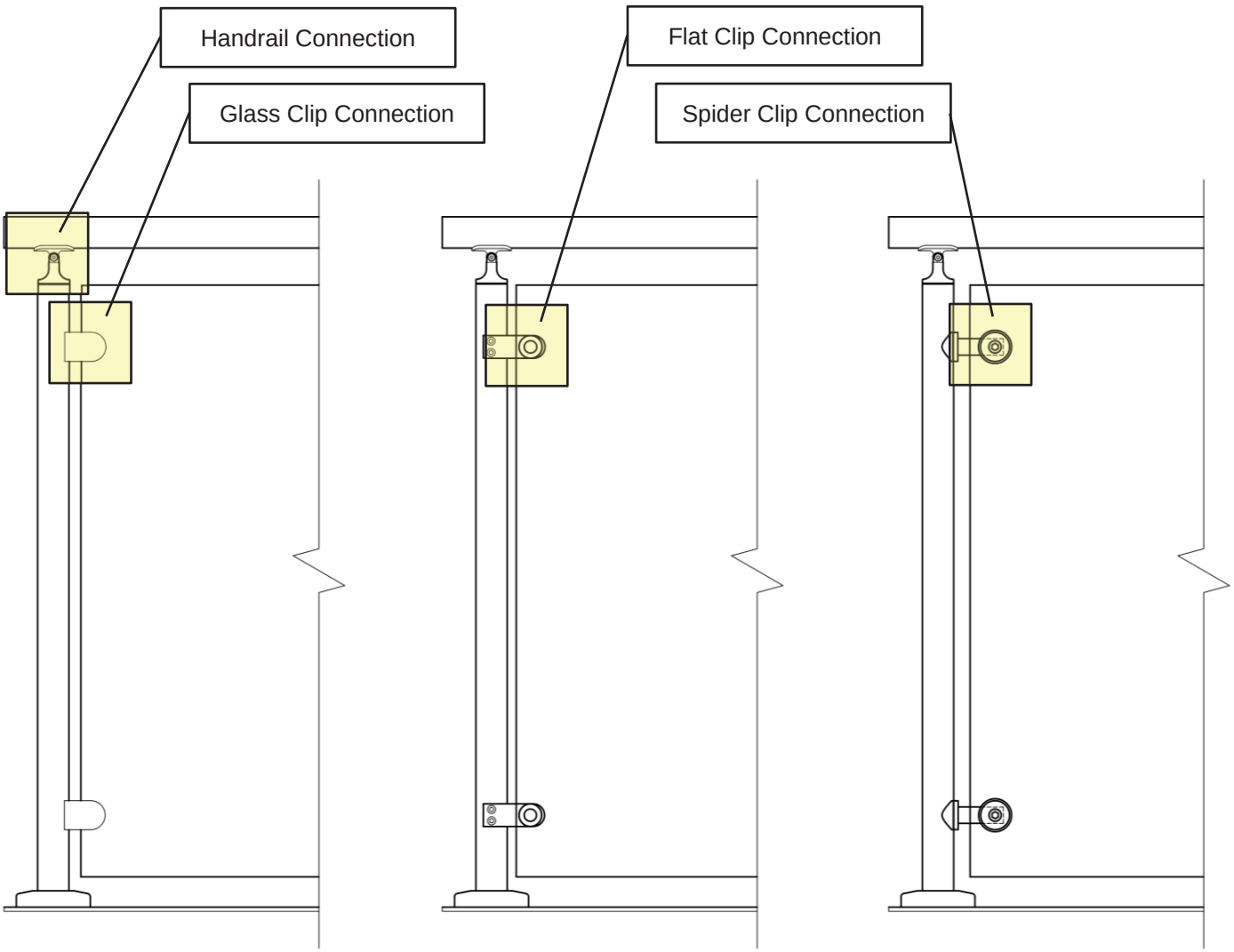

© 2019 R&B Wagner, Inc. All Rights Reserved.
WagnerArchitectural.com

6.3. Glass Clip

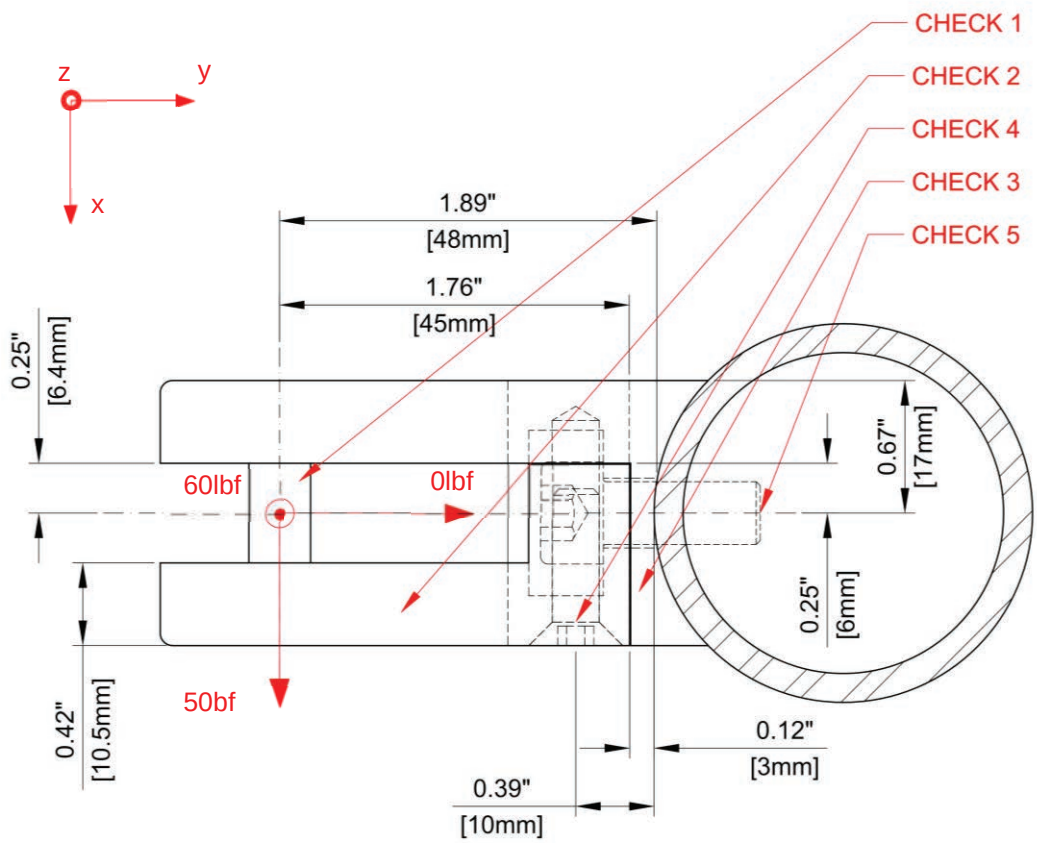

Connection Detail

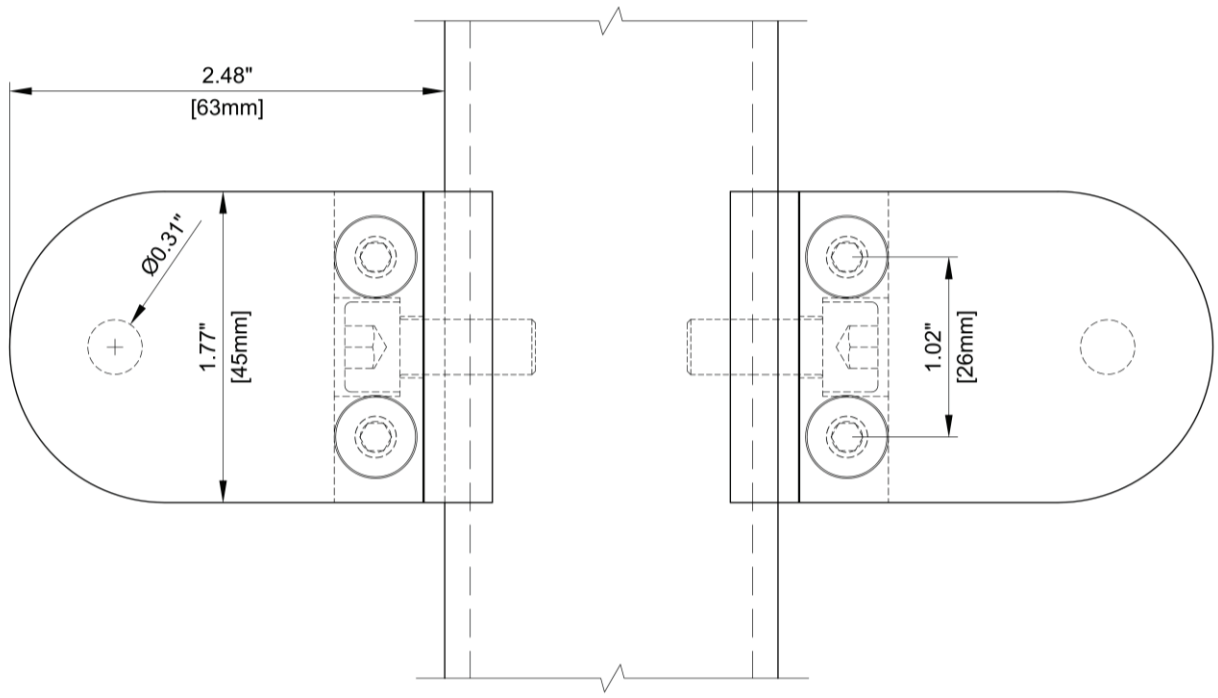

Connection Detail

Loads (ASD)

$P_x := 50 \cdot lbf$ Infill Panel Load $M_x := 0.0 \cdot lbf \cdot in$

$P_y := 0 \cdot lbf$ $M_y := 0.0 \cdot lbf \cdot in$

$P_z := 60 \cdot lbf$ Glass Dead Load $M_z := 0.0 \cdot lbf \cdot in$

#1 Check Pin Capacity

5/16" Dia Pin, A4-50 Stainless Steel

Input

$d_1 := 0.3125 \cdot in$ $A_{b1} := 0.25 \cdot \pi \cdot d_1^2 = 0.08\,in^2$ $F_{u1} := 500 \cdot MPa$

$F_{nt1} := 0.75 \cdot F_{u1} = 54.39 \cdot ksi$ $F_{nv1} := 0.563 \cdot F_{u1} = 40.83 \cdot ksi$

Forces

Shear $V_1 := P_z = 0.06 \cdot kip$

Tension $T_1 := 0.0 \cdot lbf = 0 \cdot kip$

Capacity $\Omega_1 := 2.00$

Shear $V_{n1} := \frac{F_{nv1} \cdot A_{b1}}{\Omega_1} = 1566\,lbf$

Tension $T_{n1} := \frac{F_{nt1} \cdot A_{b1}}{\Omega_1} = 2.09 \cdot kip$

Interaction

$$IR1_1 := \left(\frac{T_1}{T_{n1}}\right)^2 + \left(\frac{V_1}{V_{n1}}\right)^2 = 0$$

CheckASD1 = "OK"

© 2019 R&B Wagner, Inc. All Rights Reserved.
WagnerArchitectural.com

#2 Check Clip Plate Capacity

63mm x 45mm x 10.5mm Plate, 316 Stainless Steel

Properties:

$t_2 := 10.5 \cdot mm$ $\quad h_2 := 45 \cdot mm$ $\quad L_2 := 48 \cdot mm$

$F_{y2} := 30ksi$ $\quad F_{u2} := 70ksi$ $\quad E_2 := 29000ksi$

$Z_{s2} := 0.25 \cdot t_2 \cdot h_2^2 = 0.32 in^3$ $\quad Z_{w2} := 0.25 \cdot h_2 \cdot t_2^2 = 0.08 in^3$

$I_{w2} := \frac{h_2 \cdot t_2^3}{12} = 0.01 in^4$ $\quad S_{s2} := \frac{t_2 \cdot h_2^2}{6} = 0.22 in^3$

$r_2 := \sqrt{\frac{I_{w2}}{t_2 \cdot h_2}} = 0.12 in$ $\quad kLr_2 := \frac{2.0 \cdot L_2}{r_2}$

Force

Strong Axis Moment $\quad M_{s2} := P_z \cdot 48 \cdot mm = 0.11 \cdot in \cdot kip$

Weak Axis Moment $\quad M_{w2} := P_x \cdot 45 \cdot mm = 0.09 in \cdot kip$

Capacity $\quad \Omega_2 := 1.67$

Strong Axis Moment $\quad \frac{L_2 \cdot h_2}{t_2^2} = 19.59 \quad \boxed{<} \quad \frac{0.08 \cdot E_2}{F_{y2}} = 77$

$M_{ns2} := \frac{F_{y2} \cdot Z_{s2}}{\Omega_2} = 5.83 \cdot in \cdot kip$

Weak Axis Moment $\quad M_{nw2} := \frac{F_{y2} \cdot Z_{w2}}{\Omega_2} = 1.36 in \cdot kip$

Interaction

$IR1_2 := \frac{M_{w2}}{M_{nw2}} + \frac{M_{s2}}{M_{ns2}} = 0.08$

$\boxed{CheckASD2 = "OK"}$

© 2019 R&B Wagner, Inc. All Rights Reserved.
WagnerArchitectural.com

#3 Check Clip Plate for Local Bending

3mm Thick Clip Wall, 316 Stainless Steel

Properties:

$t_3 := 3.0 \cdot mm$ $\quad b_3 := 45 \cdot mm$ $\quad F_{y3} := 30 \cdot ksi$ $\quad Z_{w3} := 0.25 \cdot b_3 \cdot t_3^2 = 0.006\ in^3$

Force

Bolt Tension $\quad T_3 := P_x \cdot \frac{48 \cdot mm}{90\% \cdot 17 \cdot mm} + P_z \cdot \frac{48 \cdot mm}{90\% \cdot 45 \cdot mm \div 2} = 299 \cdot lbf$

Weak Axis Moment $\quad M_3 := T_3 \cdot 6 \cdot mm = 0.07 \cdot kip \cdot in$

Capacity

$\Omega_3 := 1.67$

Weak Axis Moment $\quad M_{n3} := \frac{F_{y3} \cdot Z_{w3}}{\Omega_3} = 0.11\ in \cdot kip$

Interaction

$IR1_3 := \frac{M_3}{M_{n3}} = 0.64$

CheckASD3 = "OK"

© 2019 R&B Wagner, Inc. All Rights Reserved.
WagnerArchitectural.com

#4 Check Bolt Capacity

(2) - M6x1 Bolts, A4-50 Stainless Steel

Properties:

$d_{b4} := 6 \cdot mm$ $\quad F_{y4} := 210 \cdot MPa$ $\quad F_{u4} := 500 \cdot MPa$ $\quad N_4 := \frac{1}{1} \cdot \frac{1}{mm}$

$LE_4 := 0.20 \cdot in$ $\quad F_{us4} := 70ksi$ $\quad SF_4 = 3$

$F_{nt4} := \min\left(0.75 \cdot F_{y4}, \frac{1}{SF_4} \cdot F_{u4}\right) = 22.84 \cdot ksi$ $\quad F_{nv4} := \min\left(0.75 \cdot F_{y4} \div \sqrt{3}, \frac{1}{SF_4} \cdot F_{u4} \div \sqrt{3}\right) = 13.19 \cdot ksi$

$A_{S4} := 0.7854 \cdot \left(d_{b4} - \frac{0.9743}{N_4}\right)^2 = 0.031\, in^2$ $\quad A_{R4} := 0.7854 \cdot \left(d_{b4} - \frac{1.2269}{N_4}\right)^2 = 0.028\, in^2$

Demand

Tension $\quad T_4 := \frac{P_x}{2 \cdot Bolts} \cdot \frac{45 \cdot mm}{90\% \cdot 10 \cdot mm} = 125\, lbf$

Shear $\quad V_4 := \sqrt{\left(P_z \cdot \frac{45 \cdot mm}{26 \cdot mm}\right)^2 + \left(\frac{P_z}{2}\right)^2} = 108\, lbf$

Capacity

Tension Capacity $\quad T_{n4} := F_{nt4} \cdot A_{S4} = 702 \cdot lbf$

Shear Capacity $\quad V_{n4} := F_{nv4} \cdot A_{R4} = 366\, lbf$

Pull-out Capacity

$TSA_{E4} := 8.65 \cdot mm^2$ $\quad TSA_{I4} := 12.19 \cdot mm^2$

Internal Thread Capacity $\quad$ Conditions = "Thin"

$T_{I4} := \frac{LE_4 \cdot N_4 \cdot TSA_{I4} \cdot F_{us4}}{SF_4 \cdot \sqrt{3}} = 1293\, lbf$

External Thread Capacity

$T_{E4} := \min\left(\frac{LE_4 \cdot N_4 \cdot TSA_{E4} \cdot F_{u4}}{SF_4 \cdot \sqrt{3}}, \frac{0.75 \cdot LE_4 \cdot N_4 \cdot TSA_{E4} \cdot F_{y4}}{\sqrt{3}}\right) = 898\, lbf$

Pull-out Capacity $\quad T_{outn4} := \min(T_{I4}, T_{E4}) = 898 \cdot lbf$

Interaction

$IR1_4 := \left(\frac{T_4}{T_{n4}}\right)^2 + \left(\frac{V_4}{V_{n4}}\right)^2 = 0.12$ $\quad IR2_4 := \left(\frac{T_4}{T_{outn4}}\right)^2 = 0.02$

CheckASD4 = "OK"

© 2019 R&B Wagner, Inc. All Rights Reserved.
WagnerArchitectural.com

#5 Check Bolt Capacity

M8x1.25 Bolt, 316 Stainless Steel

Properties:

$d_{b5} := 8 \cdot mm$ $\quad F_{y5} := 30 \cdot ksi$ $\quad F_{u5} := 70 \cdot ksi$ $\quad N_5 := \frac{1}{1.25} \cdot \frac{1}{mm}$

$LE_5 := 0.135 \cdot in$ $\quad F_{us5} := 70ksi$ $\quad SF_5 = 2.5$

$F_{nt5} := \min\left(0.75 \cdot F_{y5}, \frac{1}{SF_5} \cdot F_{u5}\right) = 22.5 \cdot ksi$ $\quad F_{nv5} := \min\left(0.75 \cdot F_{y5} \div \sqrt{3}, \frac{1}{SF_5} \cdot F_{u5} \div \sqrt{3}\right) = 12.99 \cdot ksi$

$A_{S5} := 0.7854 \cdot \left(d_{b5} - \frac{0.9743}{N_5}\right)^2 = 0.056\, in^2$ $\quad A_{R5} := 0.7854 \cdot \left(d_{b5} - \frac{1.2269}{N_5}\right)^2 = 0.051\, in^2$

Demand

Tension $\quad T_5 := P_x \cdot \frac{48 \cdot mm}{90\% \cdot 17 \cdot mm} + P_z \cdot \frac{48 \cdot mm}{90\% \cdot 45 \cdot mm \div 2} = 299\, lbf$

Shear $\quad V_5 := \sqrt{P_x^2 + P_z^2} = 78\, lbf$

Capacity

Tension Capacity $\quad T_{n5} := F_{nt5} \cdot A_{S5} = 1260 \cdot lbf$

Shear Capacity $\quad V_{n5} := F_{nv5} \cdot A_{R5} = 661\, lbf$

Pull-out Capacity

$TSA_{E5} := 15.20 \cdot mm^2$ $\quad TSA_{I5} := 21.04 \cdot mm^2$

Internal Thread Capacity $\quad$ Conditions = "Thin"

$T_{I5} := \frac{0.85 \cdot LE_5 \cdot d_{b5} \cdot F_{us5}}{SF_5} = 1012\, lbf$

External Thread Capacity

$T_{E5} := \min\left(\frac{LE_5 \cdot N_5 \cdot TSA_{E5} \cdot F_{u5}}{SF_5 \cdot \sqrt{3}}, \frac{0.75 \cdot LE_5 \cdot N_5 \cdot TSA_{E5} \cdot F_{y5}}{\sqrt{3}}\right) = 840\, lbf$

Pull-out Capacity $\quad T_{outn5} := \min(T_{I5}, T_{E5}) = 840 \cdot lbf$

Interaction

$IR1_5 := \left(\frac{T_5}{T_{n5}}\right)^2 + \left(\frac{V_5}{V_{n5}}\right)^2 = 0.07$ $\quad IR2_5 := \left(\frac{T_5}{T_{outn5}}\right)^2 = 0.13$ $\quad$ CheckASD5 = "OK"

© 2019 R&B Wagner, Inc. All Rights Reserved.
WagnerArchitectural.com

6.4. Flat Clip

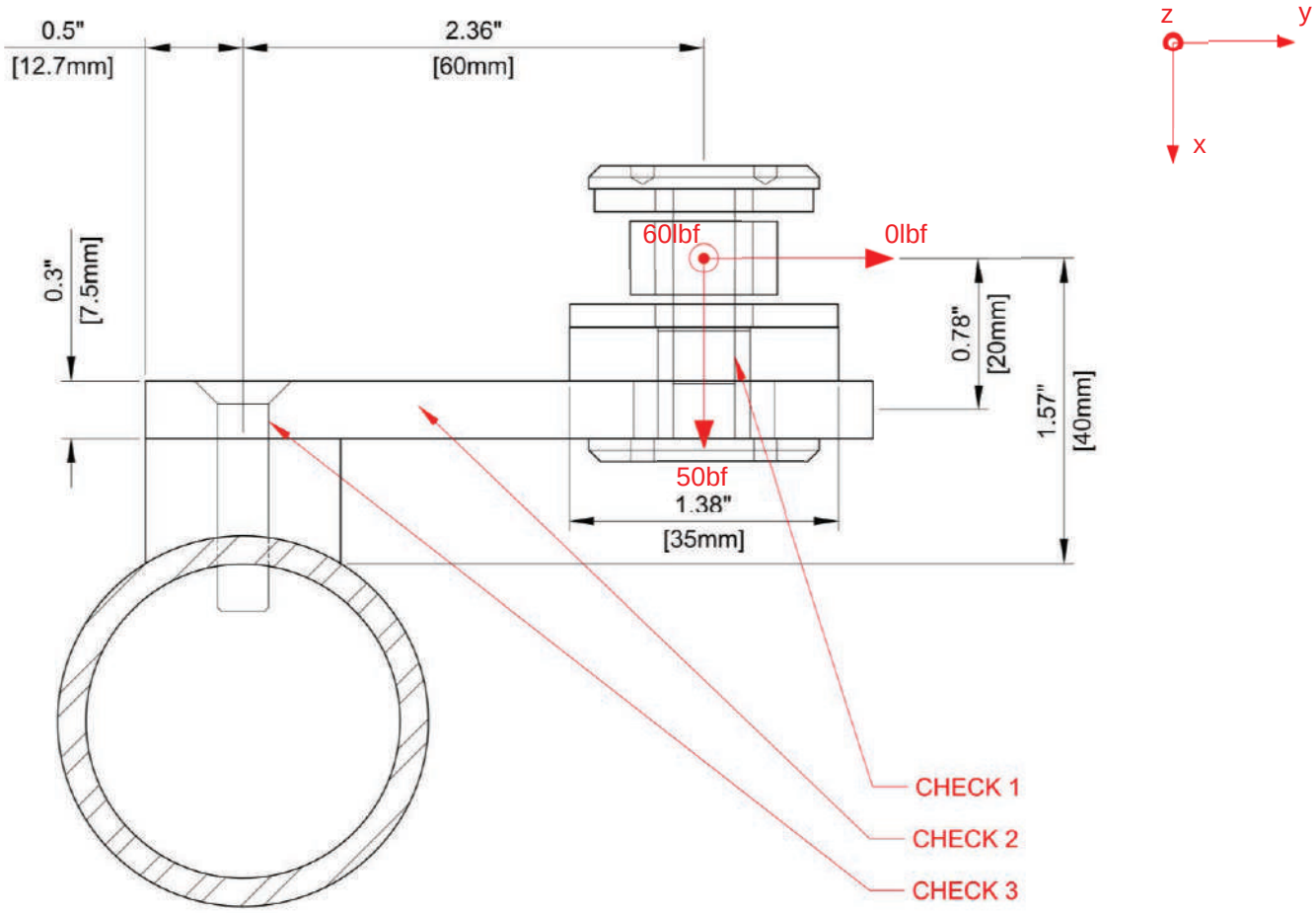

Connection Detail

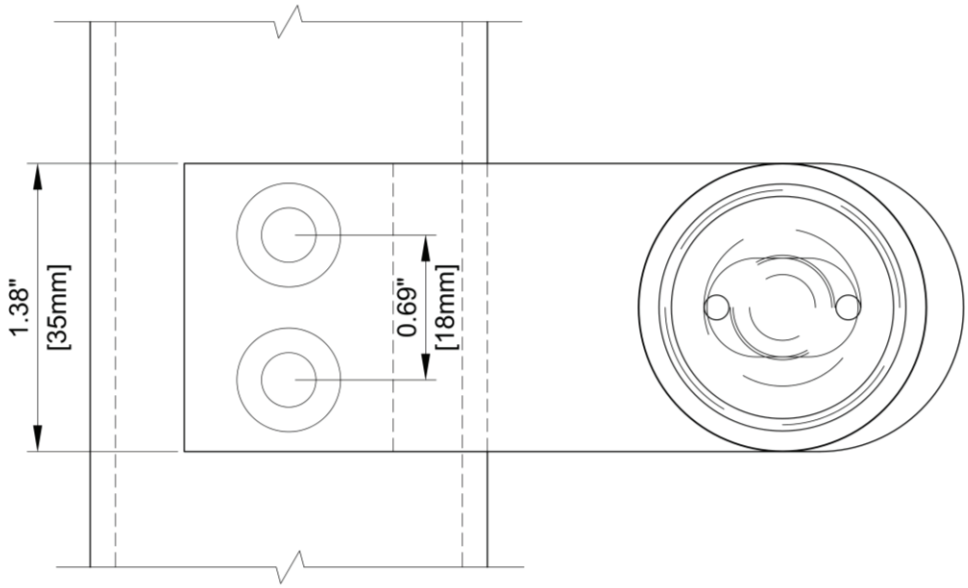

Arm Detail

Loads (ASD)

$P_x := 50 \cdot lbf$ Infill Panel Load $M_x := 0.0 \cdot lbf \cdot in$

$P_y := 0 \cdot lbf$ $M_y := 0.0 \cdot lbf \cdot in$

$P_z := 60 \cdot lbf$ Glass Dead Load $M_z := 0.0 \cdot lbf \cdot in$

#1 Check Bolt Capacity

M8x1.25 Bolt, A4-50 Stainless Steel

Properties:

$d_{b1} := 8 \cdot mm$ $F_{y1} := 210 \cdot MPa$ $F_{u1} := 500 \cdot MPa$ $N_1 := \frac{1}{1.25} \cdot \frac{1}{mm}$

$LE_1 := 0.375 \cdot in$ $F_{us1} := 70ksi$ $SF_1 = 2.5$

$F_{nt1} := \min\left(0.75 \cdot F_{y1}, \frac{1}{SF_1} \cdot F_{u1}\right) = 22.84 \cdot ksi$ $F_{nv1} := \min\left(0.75 \cdot F_{y1} \div \sqrt{3}, \frac{1}{SF_1} \cdot F_{u1} \div \sqrt{3}\right) = 13.19 \cdot ksi$

$A_{S1} := 0.7854 \cdot \left(d_{b1} - \frac{0.9743}{N_1}\right)^2 = 0.056\, in^2$ $A_{R1} := 0.7854 \cdot \left(d_{b1} - \frac{1.2269}{N_1}\right)^2 = 0.051\, in^2$

Demand

Tension $T_1 := P_x + P_z \cdot \frac{20 \cdot mm}{90\% \cdot 35 \cdot mm \div 2} = 126\, lbf$

Shear $V_1 := P_z = 60\, lbf$

Capacity

Tension Capacity $T_{n1} := F_{nt1} \cdot A_{S1} = 1279 \cdot lbf$

Shear Capacity $V_{n1} := F_{nv1} \cdot A_{R1} = 671\, lbf$

Pull-out Capacity

$TSA_{E1} := 15.20 \cdot mm^2$ $TSA_{I1} := 21.04 \cdot mm^2$

Internal Thread Capacity Conditions = "Thick"

$$T_{I1} := \frac{LE_1 \cdot N_1 \cdot TSA_{I1} \cdot F_{us1}}{SF_1 \cdot \sqrt{3}} = 4017\, lbf$$

External Thread Capacity

$$T_{E1} := \min\left(\frac{LE_1 \cdot N_1 \cdot TSA_{E1} \cdot F_{u1}}{SF_1 \cdot \sqrt{3}}, \frac{0.75 \cdot LE_1 \cdot N_1 \cdot TSA_{E1} \cdot F_{y1}}{\sqrt{3}}\right) = 2368\, lbf$$

Pull-out Capacity $T_{outn1} := \min(T_{I1}, T_{E1}) = 2368 \cdot lbf$

Interaction

$IR1_1 := \left(\frac{T_1}{T_{n1}}\right)^2 + \left(\frac{V_1}{V_{n1}}\right)^2 = 0.02$ $IR2_1 := \left(\frac{T_1}{T_{outn1}}\right)^2 = 0$

CheckASD1 = "OK"

#2 Check Plate Capacity

164mm x 35mm x 7.5mm Plate, 316 Stainless Steel

Properties:

$t_2 := 7.5 \cdot mm$ $\quad h_2 := 35 \cdot mm$ $\quad L_2 := 60 \cdot mm$

$F_{y2} := 30ksi$ $\quad F_{u2} := 70ksi$ $\quad E_2 := 29000ksi$

$Z_{s2} := 0.25 \cdot t_2 \cdot h_2^2 = 0.14\,in^3$ $\quad Z_{w2} := 0.25 \cdot h_2 \cdot t_2^2 = 0.03\,in^3$

$I_{w2} := \frac{h_2 \cdot t_2^3}{12} = 0\,in^4$ $\quad S_{s2} := \frac{t_2 \cdot h_2^2}{6} = 0.09\,in^3$

$r_2 := \sqrt{\frac{I_{w2}}{t_2 \cdot h_2}} = 0.09\,in$ $\quad kLr_2 := \frac{2.0 \cdot L_2}{r_2}$

Force

Strong Axis Moment $\quad M_{s2} := P_z \cdot 60 \cdot mm = 0.14 \cdot in \cdot kip$

Weak Axis Moment $\quad M_{w2} := P_x \cdot 60 \cdot mm = 0.12\,in \cdot kip$

Torsion $\quad T_2 := P_z \cdot 20 \cdot mm = 0.05\,in \cdot kip$

Capacity $\quad \Omega_2 := 1.67$

Strong Axis Moment $\quad \frac{L_2 \cdot h_2}{t_2^2} = 37.33 \quad \boxed{<} \quad \frac{0.08 \cdot E_2}{F_{y2}} = 77$

$M_{ns2} := \frac{F_{y2} \cdot Z_{s2}}{\Omega_2} = 2.52 \cdot in \cdot kip$

Weak Axis Moment $\quad M_{nw2} := \frac{F_{y2} \cdot Z_{w2}}{\Omega_2} = 0.54\,in \cdot kip$

Torsion $\quad J_2 := if\left[\frac{h_2}{t_2} < 10, \left(\frac{1}{3} - 0.2 \cdot \frac{t_2}{h_2}\right) \cdot h_2 \cdot t_2^3, \frac{h_2 \cdot t_2^3}{3}\right] = 0.01 \cdot in^4$

$T_{n2} := \frac{0.6 \cdot F_{y2} \cdot J_2}{t_2 \cdot \Omega_2} = 0.38\,in \cdot kip$

Interaction

$IR1_2 := \frac{M_{w2}}{M_{nw2}} + \frac{M_{s2}}{M_{ns2}} + \left(\frac{T_2}{T_{n2}}\right)^2 = 0.29$

$\boxed{CheckASD2 = \text{"OK"}}$

© 2019 R&B Wagner, Inc. All Rights Reserved.
WagnerArchitectural.com

#3 Check Bolt Capacity

(2) - M6x1 Bolt, A4-50 Stainless Steel

Properties:

$d_{b3} := 6 \cdot mm$ $\quad F_{y3} := 210 \cdot MPa$ $\quad F_{u3} := 500 \cdot MPa$ $\quad N_3 := \frac{1}{1} \cdot \frac{1}{mm}$

$LE_3 := 0.120 \cdot in$ $\quad F_{us3} := 70ksi$ $\quad SF_3 = 3$

$F_{nt3} := \min\left(0.75 \cdot F_{y3}, \frac{1}{SF_3} \cdot F_{u3}\right) = 22.84 \cdot ksi$ $\quad F_{nv3} := \min\left(0.75 \cdot F_{y3} \div \sqrt{3}, \frac{1}{SF_3} \cdot F_{u3} \div \sqrt{3}\right) = 13.19 \cdot ksi$

$A_{S3} := 0.7854 \cdot \left(d_{b3} - \frac{0.9743}{N_3}\right)^2 = 0.031\, in^2$ $\quad A_{R3} := 0.7854 \cdot \left(d_{b3} - \frac{1.2269}{N_3}\right)^2 = 0.028\, in^2$

Demand

Tension

$$T_3 := \frac{P_x}{2 \cdot Bolts} + \frac{M_{w2}}{(2 \cdot Bolts) \cdot (90\% \cdot 1.0 \cdot in \div 2)} + \frac{P_z \cdot 40 \cdot mm}{18 \cdot mm} = 290\, lbf$$

Shear

$$V_3 := \sqrt{\left(\frac{M_{s2}}{18 \cdot mm}\right)^2 + \left(\frac{P_z}{2}\right)^2} = 202\, lbf$$

Capacity

Tension Capacity $\quad T_{n3} := F_{nt3} \cdot A_{S3} = 702 \cdot lbf$

Shear Capacity $\quad V_{n3} := F_{nv3} \cdot A_{R3} = 366\, lbf$

Pull-out Capacity

$TSA_{E3} := 8.65 \cdot mm^2$ $\quad TSA_{I3} := 12.19 \cdot mm^2$

Internal Thread Capacity $\quad$ Conditions = "Thin"

$$T_{I3} := \frac{0.85 \cdot LE_3 \cdot d_{b3} \cdot F_{us3}}{SF_3} = 562\, lbf$$

External Thread Capacity

$$T_{E3} := \min\left(\frac{LE_3 \cdot N_3 \cdot TSA_{E3} \cdot F_{u3}}{SF_3 \cdot \sqrt{3}}, \frac{0.75 \cdot LE_3 \cdot N_3 \cdot TSA_{E3} \cdot F_{y3}}{\sqrt{3}}\right) = 539\, lbf$$

Pull-out Capacity $\quad T_{outn3} := \min(T_{I3}, T_{E3}) = 539 \cdot lbf$

Interaction

$IR1_3 := \left(\frac{T_3}{T_{n3}}\right)^2 + \left(\frac{V_3}{V_{n3}}\right)^2 = 0.48$ $\quad IR2_3 := \left(\frac{T_3}{T_{outn3}}\right)^2 = 0.29$

CheckASD3 = "OK"

© 2019 R&B Wagner, Inc. All Rights Reserved.
WagnerArchitectural.com

6.5. Spider Clip

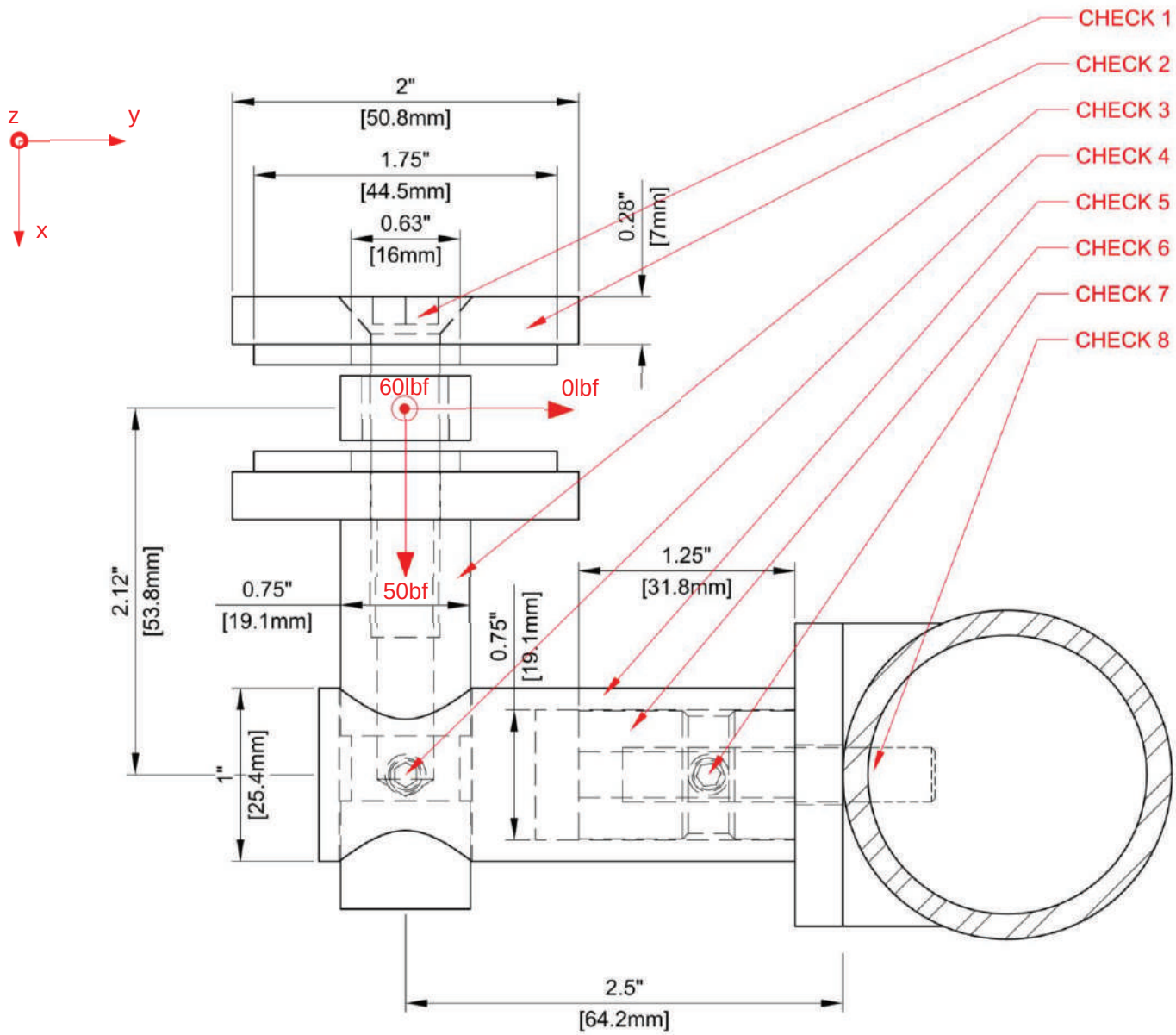

Connection Detail

© 2019 R&B Wagner, Inc. All Rights Reserved.
WagnerArchitectural.com

Loads (ASD)

$P_x := 50 \cdot lbf$ Infill Panel Load $M_x := 0.0 \cdot lbf \cdot in$

$P_y := 0 \cdot lbf$ $M_y := 0.0 \cdot lbf \cdot in$

$P_z := 60 \cdot lbf$ Glass Dead Load $M_z := 0.0 \cdot lbf \cdot in$

#1 Check Bolt Capacity

M10x1.5 Bolt, A4-50 Stainless Steel

Properties:

$d_{b1} := 10 \cdot mm$ $F_{y1} := 210 \cdot MPa$ $F_{u1} := 500 \cdot MPa$ $N_1 := \frac{1}{1.5} \cdot \frac{1}{mm}$

$LE_1 := 0.375 \cdot in$ $F_{us1} := 70ksi$ $SF_1 = 2.5$

$F_{nt1} := \min\left(0.75 \cdot F_{y1}, \frac{1}{SF_1} \cdot F_{u1}\right) = 22.84 \cdot ksi$ $F_{nv1} := \min\left(0.75 \cdot F_{y1} \div \sqrt{3}, \frac{1}{SF_1} \cdot F_{u1} \div \sqrt{3}\right) = 13.19 \cdot ksi$

$A_{S1} := 0.7854 \cdot \left(d_{b1} - \frac{0.9743}{N_1}\right)^2 = 0.089\, in^2$ $A_{R1} := 0.7854 \cdot \left(d_{b1} - \frac{1.2269}{N_1}\right)^2 = 0.081\, in^2$

Demand

Tension $T_1 := P_x + P_z \cdot \frac{2.125 \cdot in}{90\% \cdot 0.75 \cdot in \div 2} = 428\, lbf$

Shear $V_1 := P_z = 60\, lbf$

Capacity

Tension Capacity $T_{n1} := F_{nt1} \cdot A_{S1} = 2027 \cdot lbf$

Shear Capacity $V_{n1} := F_{nv1} \cdot A_{R1} = 1069\, lbf$

Pull-out Capacity

$TSA_{E1} := 23.37 \cdot mm^2$ $TSA_{I1} := 32.22 \cdot mm^2$

Internal Thread Capacity Conditions = "Thick"

$T_{I1} := \frac{LE_1 \cdot N_1 \cdot TSA_{I1} \cdot F_{us1}}{SF_1 \cdot \sqrt{3}} = 5127\, lbf$

External Thread Capacity

$T_{E1} := \min\left(\frac{LE_1 \cdot N_1 \cdot TSA_{E1} \cdot F_{u1}}{SF_1 \cdot \sqrt{3}}, \frac{0.75 \cdot LE_1 \cdot N_1 \cdot TSA_{E1} \cdot F_{y1}}{\sqrt{3}}\right) = 3034\, lbf$

Pull-out Capacity $T_{outn1} := \min(T_{I1}, T_{E1}) = 3034 \cdot lbf$

Interaction

$IR1_1 := \left(\frac{T_1}{T_{n1}}\right)^2 + \left(\frac{V_1}{V_{n1}}\right)^2 = 0.05$ $IR2_1 := \left(\frac{T_1}{T_{outn1}}\right)^2 = 0.02$

CheckASD1 = "OK"

#2 Check Clamp Capacity

2" Dia Clamp, 316 Stainless Steel

Properties:

$d_{b2} := 0.625 \cdot in$ $\quad D_{b2} := 2.0 \cdot in$ $\quad D_{w2} := 1.75 \cdot in$

$F_{y2} := 30ksi$ $\quad F_{u2} := 70ksi$ $\quad t_2 := 7.0 \cdot mm$

$$b_2 := 2 \cdot \sqrt{\left(\frac{D_{b2} - d_{b2}}{2}\right) \cdot \left(D_{b2} - \frac{D_{b2} - d_{b2}}{2}\right)} = 1.9\,in \qquad Z_{w2} := 0.25 \cdot b_2 \cdot t_2^{\,2} = 0.04\,in^3$$

Force:

Moment

$$M_2 := P_z \cdot \frac{2.125 \cdot in}{90\% \cdot D_{w2} \div 2} \cdot \frac{\left(90\% \cdot D_{w2} - d_{b2}\right)}{2} = 0.08 \cdot in \cdot kip$$

Capacity

$\Omega_2 := 1.67$

Moment Capacity

$$M_{n2} := \frac{F_{y2} \cdot Z_{w2}}{\Omega_2} = 0.65 \cdot in \cdot kip$$

Interaction

$$IR1_2 := \frac{M_2}{M_{n2}} = 0.12$$

CheckASD2 = "OK"

© 2019 R&B Wagner, Inc. All Rights Reserved.
WagnerArchitectural.com

#3 Check Bracket Capacity

3/4" Dia Bracket Shaft, 316 Stainless Steel

Properties:

$d_3 := 0.75 \cdot in$ $\quad L_3 := 2.125in$ $\quad S_3 := \pi \cdot d_3^{\,3} \div 32 = 0.04\,in^3$

$A_3 := \frac{\pi \cdot d_3^{\,2}}{4} = 0.44\,in^2$ $\quad r_3 := \frac{d_3}{4} = 0.19\,in$ $\quad Z_3 := d_3^{\,3} \div 6 = 0.0703\,in^3$

$F_{y3} := 30ksi$ $\quad E_3 := 29000ksi$ $\quad kLr_3 := \frac{1.0 \cdot L_3}{r_3} = 11$

Force

Axial Compression $\quad P_3 := P_x = 0.05 \cdot kip$

Moment $\quad M_3 := P_z \cdot 2.125 \cdot in = 0.13\,in \cdot kip$

Capacity $\quad \Omega_3 := 1.67$

Compression Strength $\quad kLr_3 = 11 \quad \boxed{<} \quad 3.77 \cdot \sqrt{\frac{E_3}{F_{y3}}} = 117$

$$F_{e3} := \frac{\pi^2 \cdot E_3}{(kLr_3)^2} = 2228.34 \cdot ksi$$

$$F_{cr3} := 0.500^{(F_{y3} \div F_{e3})} \cdot F_{y3} = 29.72 \cdot ksi$$

$$P_{n3} := \frac{(F_{cr3} \cdot A_3)}{\Omega_3} = 8 \cdot kip$$

Moment Capacity $\quad M_{n3} := \min\left(\frac{F_{y3} \cdot Z_3}{\Omega_3}, \frac{1.6 \cdot F_{y3} \cdot S_3}{\Omega_3}\right) = 1190 \cdot in \cdot lbf$

Interaction

$IR1_3 := \frac{M_3}{M_{n3}} = 0.11$ $\quad$ CheckASD3 = "OK"

© 2019 R&B Wagner, Inc. All Rights Reserved.
WagnerArchitectural.com

#4 Check Set Screw Capacity

M6x1 Set Screw, A4-50 Stainless Steel

Properties:

$d_{b4} := 6 \cdot mm$ $\quad F_{y4} := 210 \cdot MPa$ $\quad F_{u4} := 500 \cdot MPa$ $\quad N_4 := \frac{1}{1.0} \cdot \frac{1}{mm}$

$F_{nt4} := \min\left(0.75 \cdot F_{y4}, \frac{1}{SF_4} \cdot F_{u4}\right) = 22.84 \cdot ksi$ $\quad F_{nv4} := \min\left(0.75 \cdot F_{y4} \div \sqrt{3}, \frac{1}{SF_4} \cdot F_{u4} \div \sqrt{3}\right) = 13.19 \cdot ksi$

$A_{S4} := 0.7854 \cdot \left(d_{b4} - \frac{0.9743}{N_4}\right)^2 = 0.031\ in^2$ $\quad A_{R4} := 0.7854 \cdot \left(d_{b4} - \frac{1.2269}{N_4}\right)^2 = 0.028\ in^2$

Demand

Tension $\quad T_4 := 0.0 \cdot lbf = 0$

Shear $\quad V_4 := P_x = 50\ lbf$

Capacity

Tension Capacity $\quad T_{n4} := F_{nt4} \cdot A_{S4} = 702 \cdot lbf$

Shear Capacity $\quad V_{n4} := F_{nv4} \cdot A_{R4} = 366\ lbf$

Interaction

$$IR1_4 := \left(\frac{T_4}{T_{n4}}\right)^2 + \left(\frac{V_4}{V_{n4}}\right)^2 = 0.02$$

CheckASD4 = "OK"

© 2019 R&B Wagner, Inc. All Rights Reserved.
WagnerArchitectural.com

#5 Check Bracket Capacity

1" Dia Bracket Shaft, 316 Stainless Steel

Properties:

$d_5 := 1.0 \cdot in$ $\quad d_{i5} := 0.75 \cdot in$ $\quad L_5 := 2.5 \cdot in$

$A_5 := \frac{\pi \cdot \left(d_5^2 - d_{i5}^2\right)}{4} = 0.34\,in^2$ $\quad r_5 := \frac{\sqrt{d_5^2 + d_{i5}^2}}{4} = 0.31\,in$ $\quad Z_5 := \left(d_5^3 - d_{i5}^3\right) \div 6 = 0.1\,in^3$

$F_{y5} := 30ksi$ $\quad E_5 := 29000ksi$ $\quad t_5 := \left(d_5 - d_{i5}\right) \div 2 = 0.13\,in$

$kLr_5 := \frac{2.0 \cdot L_5}{r_5} = 16$

$\frac{d_5}{t_5} = 8$ $\quad \boxed{<}$ $\quad 0.07 \cdot \frac{E_5}{F_{y5}} = 68$ $\quad$:. Compact Section for Bending

Force

Axial Compression $\quad P_5 := 0.0 \cdot lbf$

Moment $\quad M_5 := 2.5 \cdot in \cdot \sqrt{P_x^2 + P_z^2} = 0.2\,in \cdot kip$

Capacity $\quad \Omega_5 := 1.67$

Compression Strength $\quad kLr_5 = 16$ $\quad \boxed{<}$ $\quad 3.77 \cdot \sqrt{\frac{E_5}{F_{y5}}} = 117$

$F_{e5} := \frac{\pi^2 \cdot E_5}{\left(kLr_5\right)^2} = 1118.04 \cdot ksi$

$F_{cr5} := 0.500^{\left(F_{y5} \div F_{e5}\right)} \cdot F_{y5} = 29.45 \cdot ksi$

$P_{n5} := \frac{\left(F_{cr5} \cdot A_5\right)}{\Omega_5} = 6 \cdot kip$

Moment Capacity $\quad M_{n5} := \frac{F_{y5} \cdot Z_5}{\Omega_5} = 1731 \cdot in \cdot lbf$

Interaction

$IR1_5 := \frac{P_5}{2P_{n5}} + \frac{M_5}{M_{n5}} = 0.11$ $\quad \boxed{CheckASD5 = \text{"OK"}}$

© 2019 R&B Wagner, Inc. All Rights Reserved.
WagnerArchitectural.com

#6 Check Insert Capacity

3/4" Dia Insert Shaft, 316 Stainless Steel

Properties:

$d_6 := 0.75 \cdot in$ $\quad L_6 := 1.25in$ $\quad S_6 := \pi \cdot d_6^3 \div 32 = 0.04\,in^3$

$A_6 := \frac{\pi \cdot d_6^2}{4} = 0.44\,in^2$ $\quad r_6 := \frac{d_6}{4} = 0.19\,in$ $\quad Z_6 := d_6^3 \div 6 = 0.0703\,in^3$

$F_{y6} := 30ksi$ $\quad E_6 := 29000ksi$ $\quad kLr_6 := \frac{1.0 \cdot L_6}{r_6} = 7$

Force

Axial Compression $\quad P_6 := 0.0 \cdot lbf$

Moment $\quad M_6 := 2.5 \cdot in \cdot \sqrt{P_x^2 + P_z^2} = 0.2\,in \cdot kip$

Capacity $\quad \Omega_6 := 1.67$

Compression Strength $\quad kLr_6 = 7 \quad \boxed{<} \quad 3.77 \cdot \sqrt{\frac{E_6}{F_{y6}}} = 117$

$$F_{e6} := \frac{\pi^2 \cdot E_6}{(kLr_6)^2} = 6439.92 \cdot ksi$$

$$F_{cr6} := 0.500^{(F_{y6} \div F_{e6})} \cdot F_{y6} = 29.9 \cdot ksi$$

$$P_{n6} := \frac{(F_{cr6} \cdot A_6)}{\Omega_6} = 8 \cdot kip$$

Moment Capacity $\quad M_{n6} := \min\left(\frac{F_{y6} \cdot Z_6}{\Omega_6}, \frac{1.6 \cdot F_{y6} \cdot S_6}{\Omega_6}\right) = 1190 \cdot in \cdot lbf$

Interaction

$$IR1_6 := \frac{M_6}{M_{n6}} = 0.16$$

CheckASD6 = "OK"

© 2019 R&B Wagner, Inc. All Rights Reserved.
WagnerArchitectural.com

#7 Check Set Screw Capacity

M6x1 Set Screw, A4-50 Stainless Steel

Properties:

$d_{b7} := 6 \cdot mm$ $\quad F_{y7} := 210 \cdot MPa$ $\quad F_{u7} := 500 \cdot MPa$ $\quad N_7 := \frac{1}{1.0} \cdot \frac{1}{mm}$

$F_{nt7} := \min\left(0.75 \cdot F_{y7}, \frac{1}{SF_7} \cdot F_{u7}\right) = 22.84 \cdot ksi$ $\quad F_{nv7} := \min\left(0.75 \cdot F_{y7} \div \sqrt{3}, \frac{1}{SF_7} \cdot F_{u7} \div \sqrt{3}\right) = 13.19 \cdot ksi$

$A_{S7} := 0.7854 \cdot \left(d_{b7} - \frac{0.9743}{N_7}\right)^2 = 0.031\ in^2$ $\quad A_{R7} := 0.7854 \cdot \left(d_{b7} - \frac{1.2269}{N_7}\right)^2 = 0.028\ in^2$

Demand

Tension $\quad T_7 := 0.0 \cdot lbf$

Shear $\quad V_7 := P_y = 0$

Capacity

Tension Capacity $\quad T_{n7} := F_{nt7} \cdot A_{S7} = 702 \cdot lbf$

Shear Capacity $\quad V_{n7} := F_{nv7} \cdot A_{R7} = 366\ lbf$

Interaction

$$IR1_7 := \left(\frac{T_7}{T_{n7}}\right)^2 + \left(\frac{V_7}{V_{n7}}\right)^2 = 0$$

CheckASD7 = "OK"

© 2019 R&B Wagner, Inc. All Rights Reserved.
WagnerArchitectural.com

#8 Check Bolt Capacity

M8x1.25 Bolt, A4-50 Stainless Steel

Properties:

$d_{b8} := 8 \cdot mm$ $\quad F_{y8} := 210 \cdot MPa$ $\quad F_{u8} := 500 \cdot MPa$ $\quad N_8 := \frac{1}{1.25} \cdot \frac{1}{mm}$

$LE_8 := 0.135 \cdot in$ $\quad F_{us8} := 70ksi$ $\quad SF_8 = 2.5$

$F_{nt8} := \min\left(0.75 \cdot F_{y8}, \frac{1}{SF_8} \cdot F_{u8}\right) = 22.84 \cdot ksi$ $\quad F_{nv8} := \min\left(0.75 \cdot F_{y8} \div \sqrt{3}, \frac{1}{SF_8} \cdot F_{u8} \div \sqrt{3}\right) = 13.19 \cdot ksi$

$A_{S8} := 0.7854 \cdot \left(d_{b8} - \frac{0.9743}{N_8}\right)^2 = 0.056\, in^2$ $\quad A_{R8} := 0.7854 \cdot \left(d_{b8} - \frac{1.2269}{N_8}\right)^2 = 0.051\, in^2$

Demand

Tension $\quad T_8 := \frac{2.5 \cdot in \cdot \sqrt{P_x^2 + P_z^2}}{90\% \cdot 0.75 \cdot in \div 2} = 579\, lbf$

Shear $\quad V_8 := \sqrt{P_x^2 + P_z^2} = 78\, lbf$

Capacity

Tension Capacity $\quad T_{n8} := F_{nt8} \cdot A_{S8} = 1279 \cdot lbf$

Shear Capacity $\quad V_{n8} := F_{nv8} \cdot A_{R8} = 671\, lbf$

Pull-out Capacity

$TSA_{E8} := 15.20 \cdot mm^2$ $\quad TSA_{I8} := 21.04 \cdot mm^2$

Internal Thread Capacity $\quad$ Conditions = "Thin"

$T_{I8} := \frac{0.85 \cdot LE_8 \cdot d_{b8} \cdot F_{us8}}{SF_8} = 1012\, lbf$

External Thread Capacity

$T_{E8} := \min\left(\frac{LE_8 \cdot N_8 \cdot TSA_{E8} \cdot F_{u8}}{SF_8 \cdot \sqrt{3}}, \frac{0.75 \cdot LE_8 \cdot N_8 \cdot TSA_{E8} \cdot F_{y8}}{\sqrt{3}}\right) = 852\, lbf$

Pull-out Capacity $\quad T_{outn8} := \min(T_{I8}, T_{E8}) = 852 \cdot lbf$

Interaction

$IR1_8 := \left(\frac{T_8}{T_{n8}}\right)^2 + \left(\frac{V_8}{V_{n8}}\right)^2 = 0.22$ $\quad IR2_8 := \left(\frac{T_8}{T_{outn8}}\right)^2 = 0.46$ $\quad$ CheckASD8 = "OK"

© 2019 R&B Wagner, Inc. All Rights Reserved.
WagnerArchitectural.com

6.6. Handrail Connection

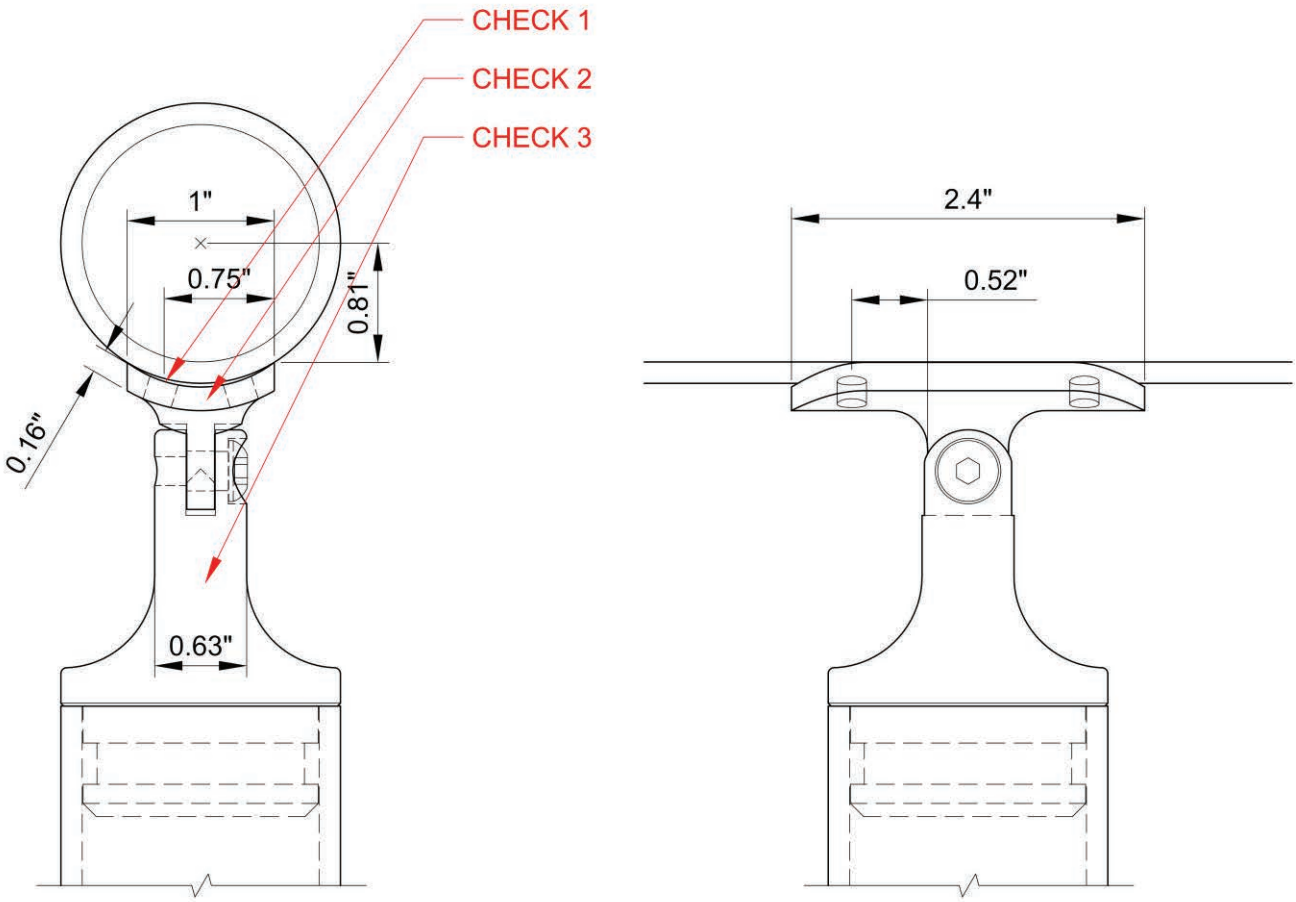

Connection Detail

© 2019 R&B Wagner, Inc. All Rights Reserved.
WagnerArchitectural.com

Loads (ASD)

$P := 200 \cdot lbf$

#1 Check Bolt Capacity

(2) - #10-16 Bolts, 316 Stainless Steel, Condition A

Properties:

$d_{b1} := 0.1900 \cdot in$ $\quad F_{y1} := 30 \cdot ksi$ $\quad F_{u1} := 75ksi$ $\quad N_1 := 16 \cdot \frac{1}{in}$

$K_1 := 0.1350 \cdot in$ $\quad LE_1 := 0.145 \cdot in$ $\quad F_{us1} := 70ksi$ $\quad SF_1 = 3$

$F_{nt1} := \min\left(0.75 \cdot F_{y1}, \frac{1}{SF_1} \cdot F_{u1}\right) = 22.5 \cdot ksi$

$F_{nv1} := \min\left(0.75 \cdot F_{y1} \div \sqrt{3}, \frac{1}{SF_1} \cdot F_{u1} \div \sqrt{3}\right) = 12.99 \cdot k$

$A_{S1} := 0.7854 \cdot K_1^2 = 0.014\, in^2$

$A_{R1} := 0.7854 \cdot K_1^2 = 0.014\, in^2$

Demand

Tension $\quad T_1 := \frac{P \cdot 0.81 \cdot in}{90\% \cdot 0.75 \cdot in} = 240\, lbf$

Shear $\quad V_1 := \frac{P}{2 \cdot Bolts} = 100\, lbf$

Capacity

Tension Capacity $\quad T_{n1} := F_{nt1} \cdot A_{S1} = 322 \cdot lbf$

Shear Capacity $\quad V_{n1} := F_{nv1} \cdot A_{R1} = 186\, lbf$

Pull-out Capacity

$TSA_{E1} := 0.0110 \cdot in^2$ $\quad TSA_{I1} := 0.0170$

Internal Thread Capacity $\quad$ Conditions = "Thin"

$T_{I1} := \frac{0.85 \cdot LE_1 \cdot d_{b1} \cdot F_{us1}}{SF_1} = 546\, lbf$

External Thread Capacity

$T_{E1} := \min\left(\frac{LE_1 \cdot N_1 \cdot TSA_{E1} \cdot F_{u1}}{SF_1 \cdot \sqrt{3}}, \frac{0.75 \cdot LE_1 \cdot N_1 \cdot TSA_{E1} \cdot F_{y1}}{\sqrt{3}}\right) = 332\, lbf$

Pull-out Capacity $\quad T_{outn1} := \min(T_{I1}, T_{E1}) = 332 \cdot lbf$

Interaction

$IR1_1 := \left(\frac{T_1}{T_{n1}}\right)^2 + \left(\frac{V_1}{V_{n1}}\right)^2 = 0.84$ $\quad IR2_1 := \frac{T_1}{T_{outn1}} = 0.72$

CheckASD1 = "OK"

© 2019 R&B Wagner, Inc. All Rights Reserved.
WagnerArchitectural.com

#1 Check Circular Weld

1/8" Fillet Weld, All Around, 70ksi Min. Filler Strength

Capacity

Capacity OK by inspection

#2 Check Saddle Bracket for Bending

14-1/4" x 7" x 5/8" Plate, A572 Gr. 50 Carbon Steel

Properties:

$F_{y2} := 30 \cdot ksi$

$Z_2 := 0.0092 \cdot in^3$

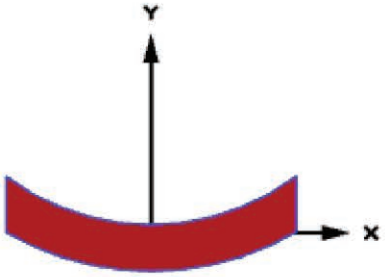

Plastic Properties

Zx	0.0092 in³
Zy	0.0437 in³

Force

Weak Axis Moment $M_2 := T_1 \cdot 0.520 \cdot in = 0.12 \cdot kip \cdot in$

Capacity

$\Omega_2 := 1.67$

Weak Axis Moment $M_{n2} := \frac{F_{y2} \cdot Z_2}{\Omega_2} = 0.17\, in \cdot kip$

Interaction

$IR1_2 := \frac{M_2}{M_{n2}} = 0.76$

CheckASD2 = "OK"

#3 Check Bracket Capacity

5/8" Dia Bracket and 1/4" Bolt , 316 Stainless Steel

Capacity

Capacity OK per Test Report P18-0055C (Heavy Duty Weld Flange Test Report) by Anderson Laboratories, Inc.
Refer to Appendix I.

© 2019 R&B Wagner, Inc. All Rights Reserved.
WagnerArchitectural.com

7. Railing Glass Design

7.1. General Design Criteria

Young's Modulus: 10,400,000 psi
Poisson Ratio: 0.22
Coefficient of Thermal Expansion = 4.9 x 10^{-6} in/in/°F

Per IBC 2015, Section 2407.1.1 Loads on Glass Handrails and Guards, use a design factor of 4.0.
Per AAMA CW-12-84, use a design factor against Modulus of Rupture for Flexure.

Allowable Glass Stress = 24,000psi (Modulus of Rupture of Fully Tempered Glass) / 4 SF = 6,000psi

The glass is analyzed with the Minimum Thickness per Table 4 in ASTM E1300 or per EN14179-1:

Dimensional Tolerances for Transparent Flat Glass per ASTM C1036

Nominal Designation		**Thickness Range**	
Imperial (US)	SI (Metric)	Minimum *(mm)*	Maximum *(mm)*
5/32"	4 mm	0.149" *(3.78)*	0.165" *(4.19)*
3/16"	5 mm	0.180" *(4.57)*	0.199" *(5.05)*
1/4"	6 mm	0.219" *(5.56)*	0.244" *(6.20)*
5/16"	8 mm	0.292" *(7.42)*	0.332" *(8.43)*
3/8"	10 mm	0.355" *(9.02)*	0.406" *(10.31)*
1/2"	12 mm	0.469" *(11.91)*	0.531" *(13.49)*
5/8"	16 mm	0.595" *(15.09)*	0.656" *(16.66)*
3/4"	19 mm	0.719" *(18.26)*	0.781" *(19.84)*

Note: Table for reference only

7.2. SG Interlayer

Thickness = 0.060"

Temp (C)	Temp (F)	Load Duration	Load Type	Young's Modulus (psi)	Poisson's Ratio
24	75	3 sec	Wind*	81,502	0.453

7.3. Overall Location and Geometry

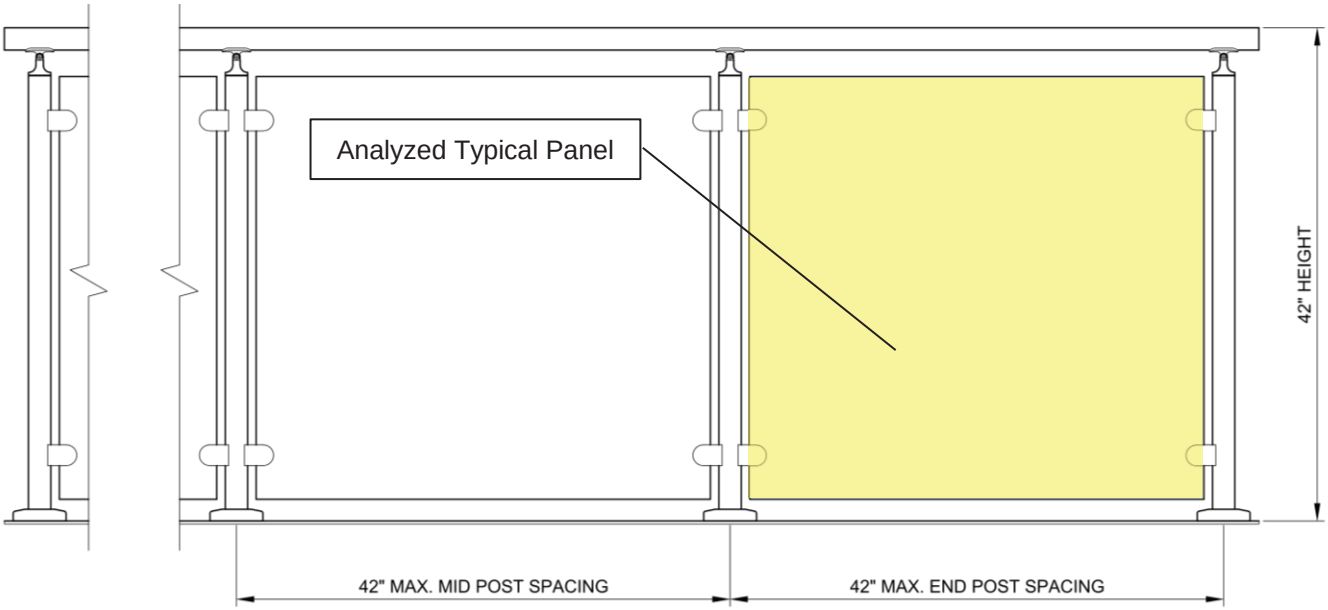

7.4. Glass Panel – Glass Clip Series

7.4.1. Glass Panel Dimensions

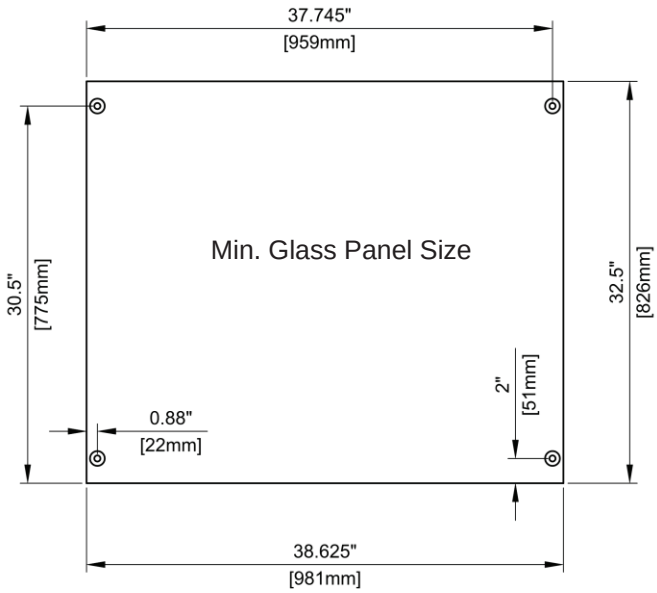

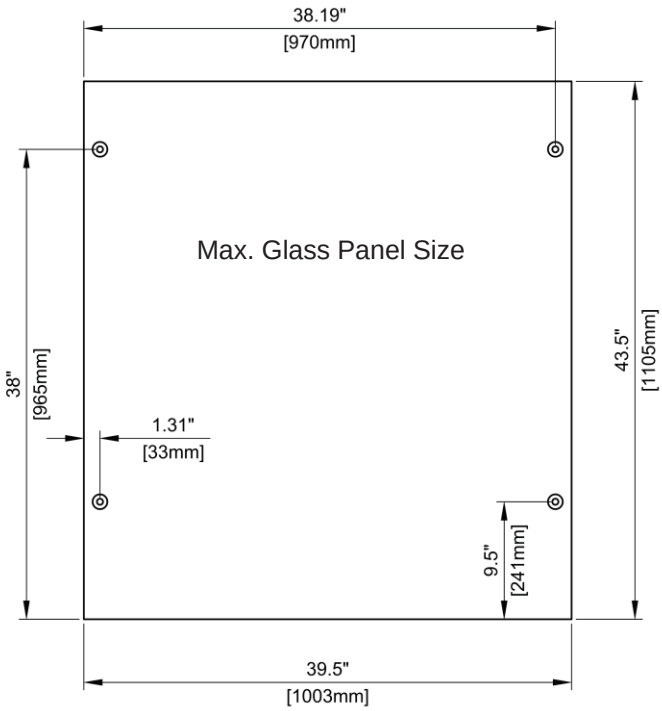

Min. Glass Panel Dimensions (W x H) = 38-5/8” x 32-1/2”.

Max. Glass Panel Dimensions (W x H) = 39-1/2” x 43-1/2”.

Max. and Min. glass dimensions create a design envelope to which the glass analysis applies. They do not guarantee that every glass panel size within these boundaries will fit into the railing system. Follow the applicable railing glass size guideline and standards and consult with the glass manufacturer for manufacturing tolerances.

7.4.2. Glass Composition

1.) 1/4” Fully Tempered Glass
2.) 0.06” SG Interlayer
3.) 1/4” Fully Tempered Glass

Note: Min. glass infill panel nominal thickness = 9/16”. Max. glass infill panel nominal thickness = 11/16”

All glass panels to be fully tempered and laminated with SG interlayer.

7.4.3. Glass Loads

PL = 5psf
LL = 50plf (for deflection purposes only)
LLc = 50lbf

Note: Glass panels are analyzed for all applicable load combinations. Only the governing load combination is shown in the result section.

© 2019 R&B Wagner, Inc. All Rights Reserved.
WagnerArchitectural.com

7.4.4. Stress Utilization

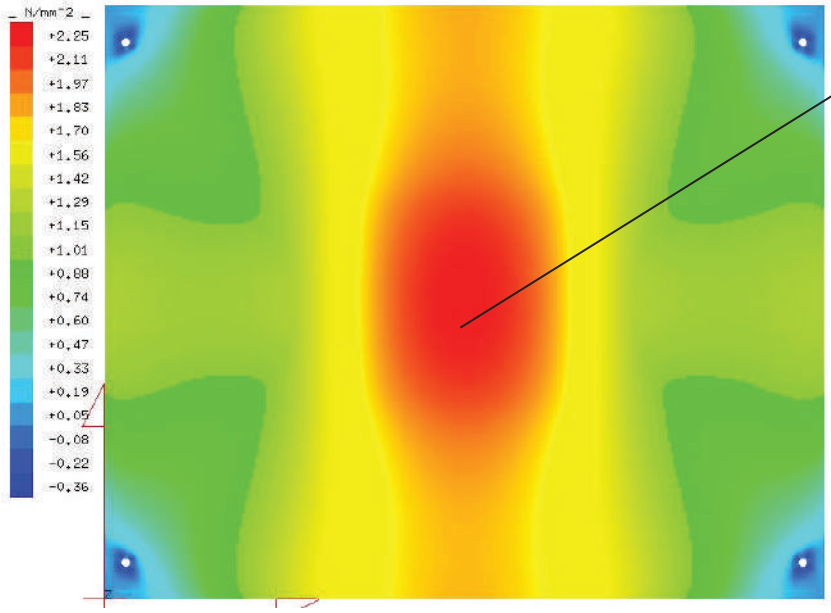

Max. Principal Stress = 2.25 MPa = 326 psi < Allowable Stress = 6,000psi OK

Load Case: DL + LLc

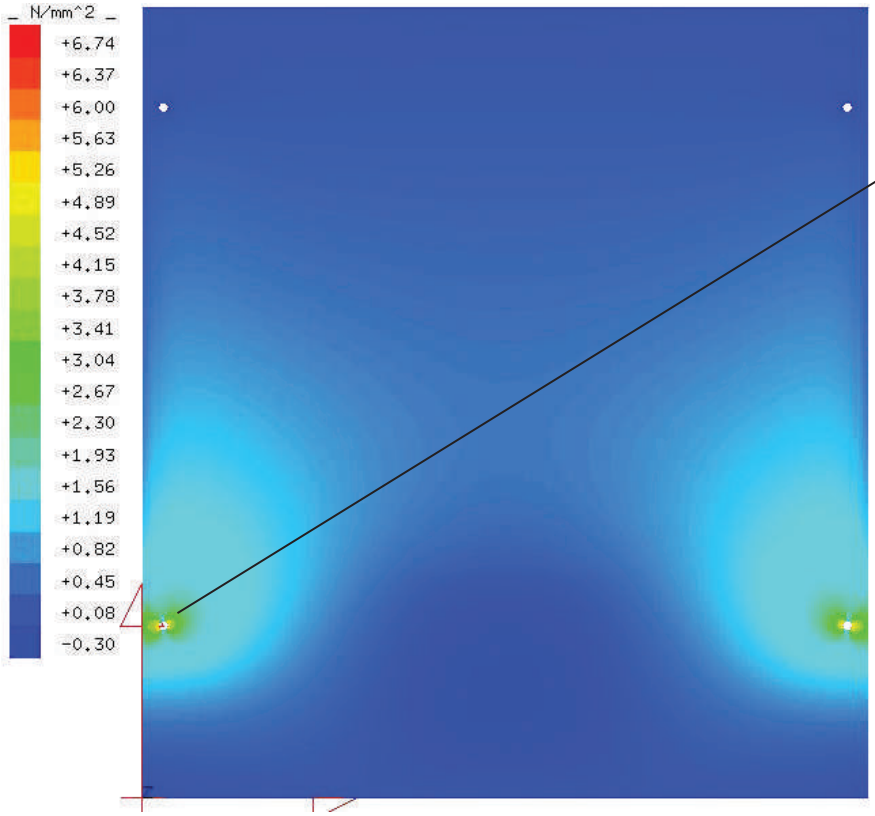

Max. Principal Stress = 6.74 MPa = 980 psi < Allowable Stress = 6,000psi OK

Load Case: DL + LLc

© 2019 R&B Wagner, Inc. All Rights Reserved.
WagnerArchitectural.com

7.4.5. Deflection Utilization

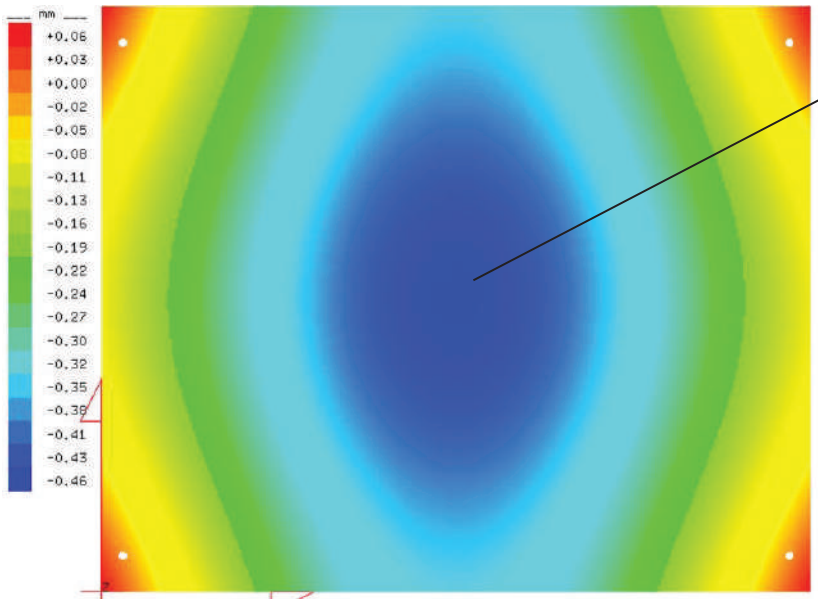

Max. Deflection = 0.02” < L/50 = 0.73” OK

Load Case: DL + LLc

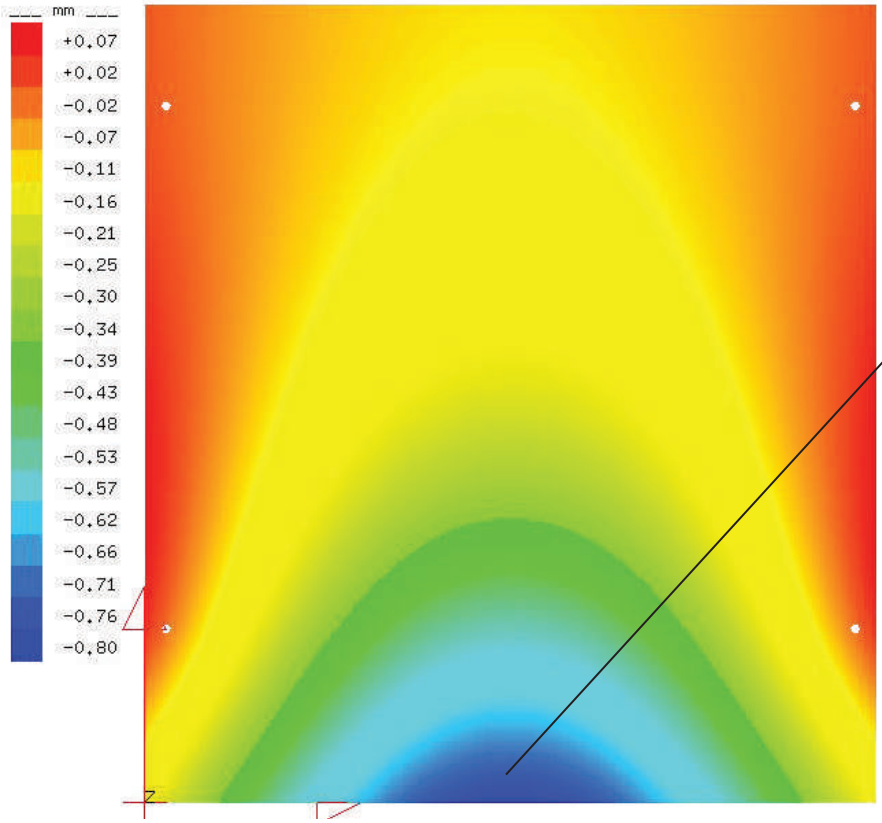

Max. Deflection = 0.03” < L/50 = 0.73” OK

Load Case: DL + LLc

© 2019 R&B Wagner, Inc. All Rights Reserved.
WagnerArchitectural.com

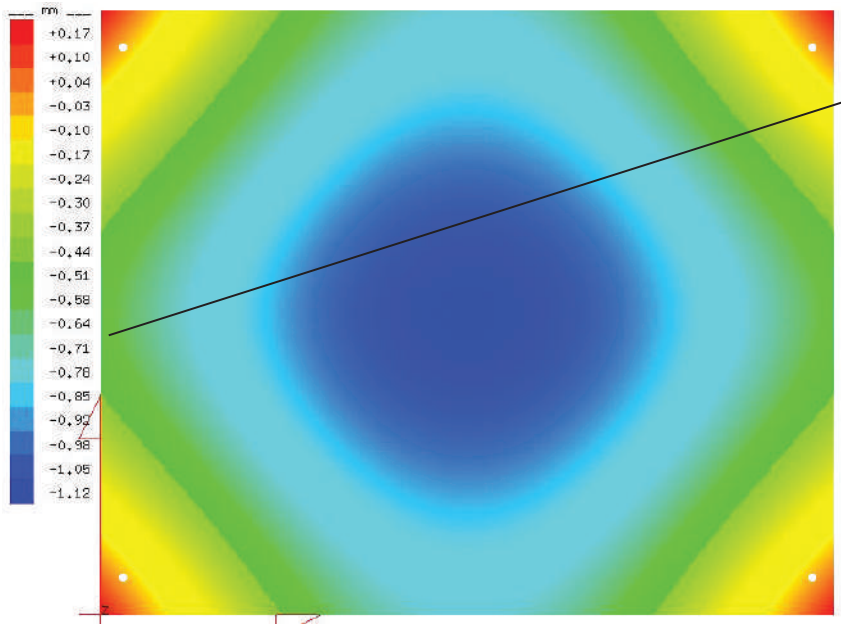

Max. Edge Deflection = 0.02”
< Glass Thickness = 9/16”, OK

Load Case: DL + LL

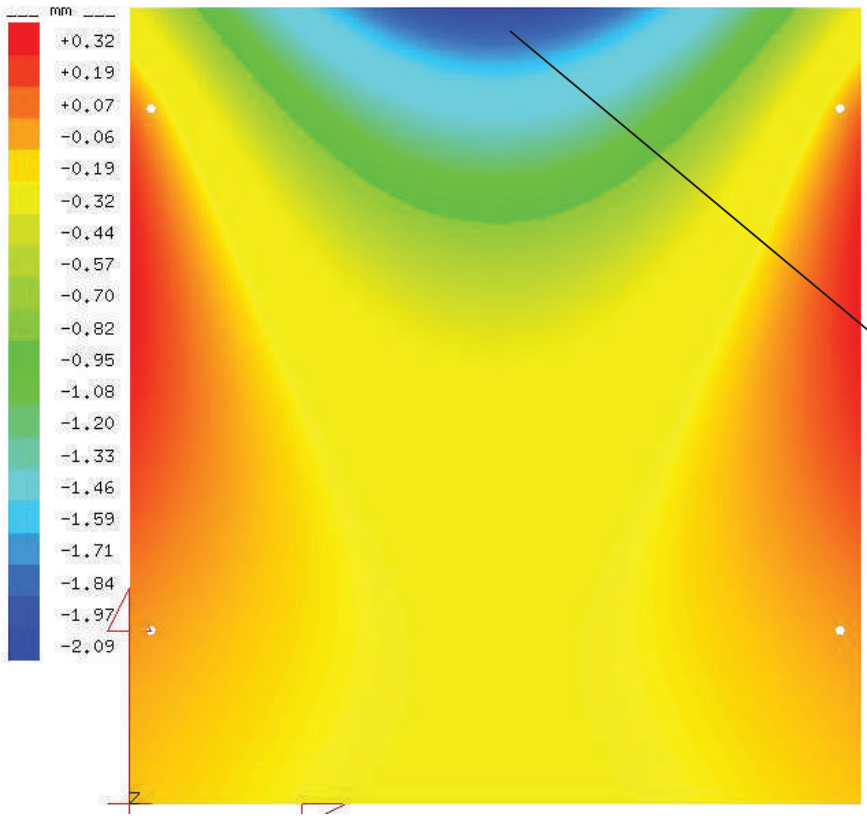

Max. Edge Deflection = 0.08”
< Glass Thickness = 9/16”, OK

Load Case: DL + LL

© 2019 R&B Wagner, Inc. All Rights Reserved.
WagnerArchitectural.com

7.5. Glass Panel – Flat Clip Series

7.5.1. Glass Panel Dimensions

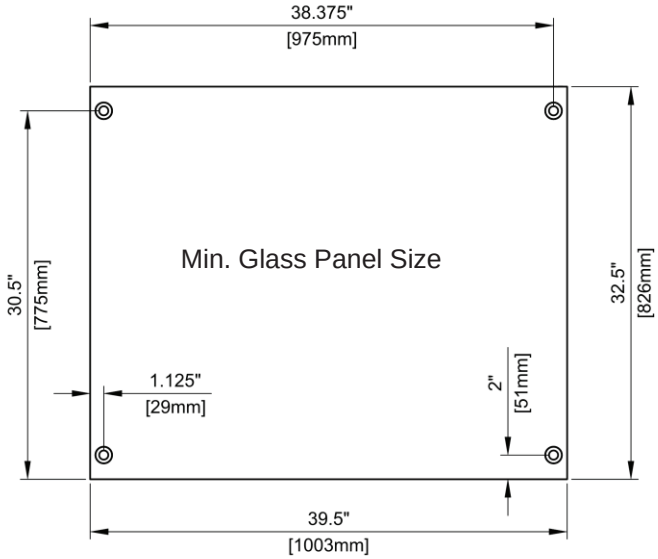

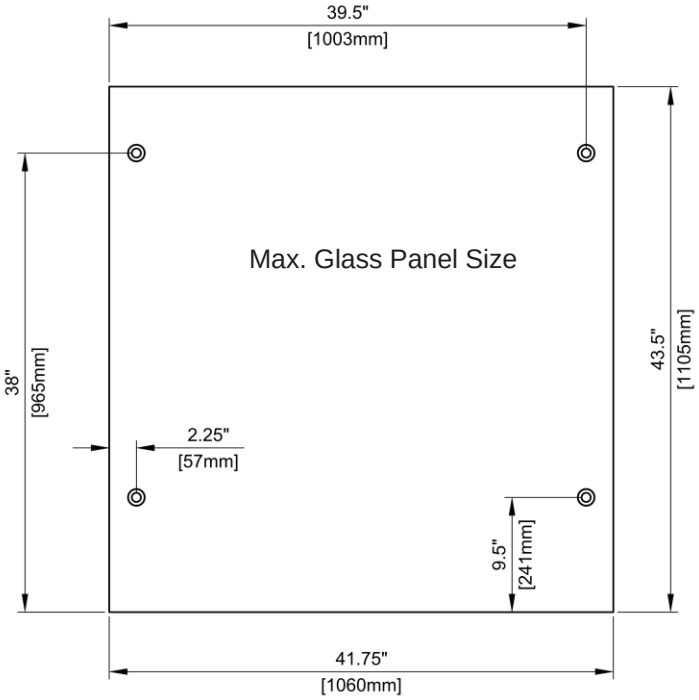

Min. Glass Panel Dimensions (W x H) = 39-1/2” x 32-1/2”.

Max. Glass Panel Dimensions (W x H) = 41-3/4” x 43-1/2”.

Max. and Min. glass dimensions create a design envelope to which the glass analysis applies. They do not guarantee that every glass panel size within these boundaries will fit into the railing system. Follow the applicable railing glass size guideline and standards and consult with the glass manufacturer for manufacturing tolerances.

7.5.2. Glass Composition

4.) 1/4” Fully Tempered Glass
5.) 0.06” SG Interlayer
6.) 1/4” Fully Tempered Glass

Note: Min. glass infill panel nominal thickness = 9/16”. Max. glass infill panel nominal thickness = 11/16”

All glass panels to be fully tempered and laminated with SG interlayer.

7.5.3. Glass Loads

PL = 5psf
LL = 50plf (for deflection purposes only)
LLc = 50lbf

Note: Glass panels are analyzed for all applicable load combinations. Only the governing load combination is shown in the result section.

© 2019 R&B Wagner, Inc. All Rights Reserved.
WagnerArchitectural.com

7.5.4. Stress Utilization

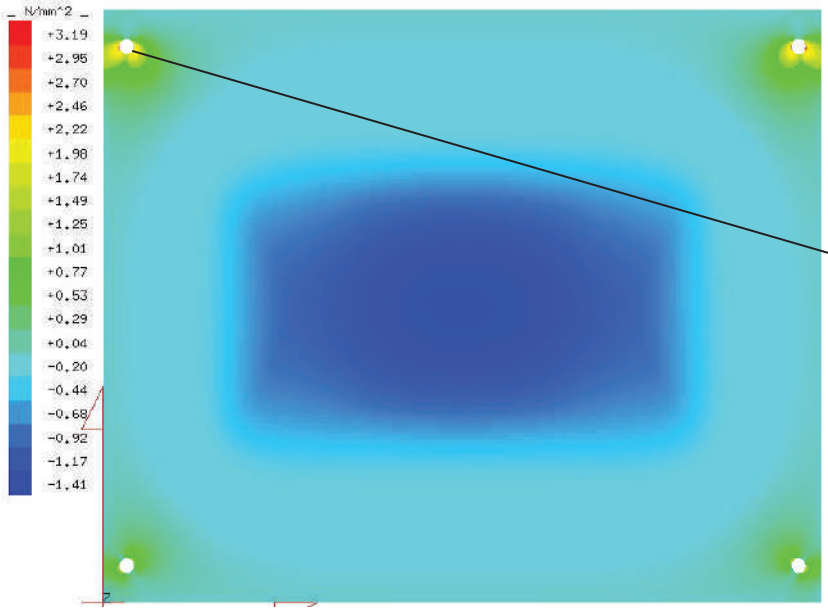

Max. Principal Stress = 3.19 MPa = 463 psi < Allowable Stress = 6,000psi OK

Load Case: DL + LLc

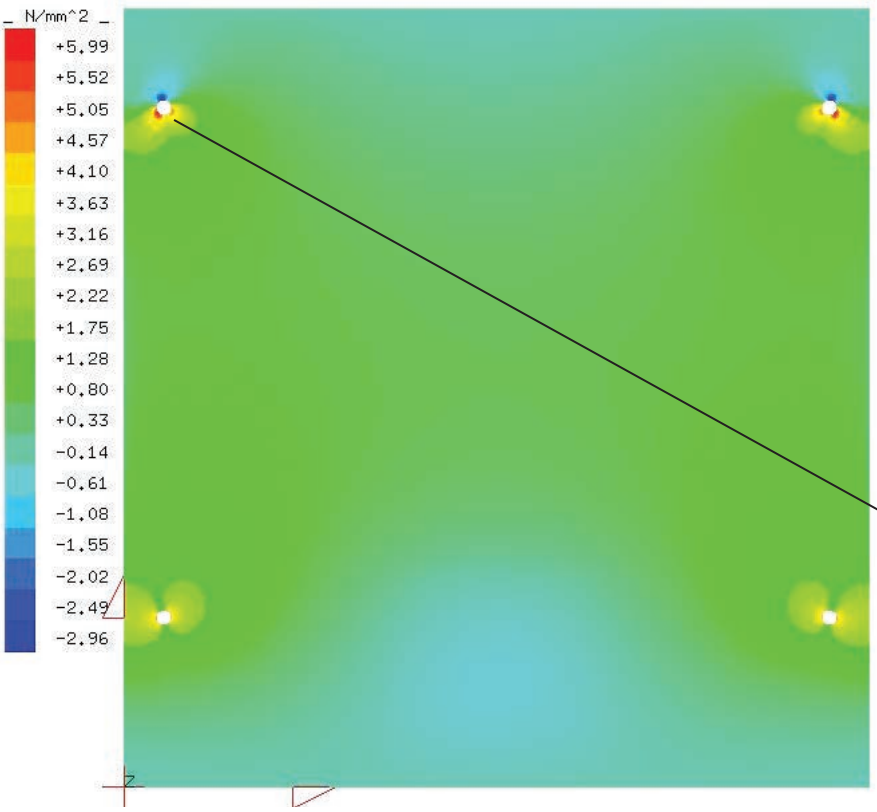

Max. Principal Stress = 5.99 MPa = 870 psi < Allowable Stress = 6,000psi OK

Load Case: DL + LLc

© 2019 R&B Wagner, Inc. All Rights Reserved.
WagnerArchitectural.com

7.5.5. Deflection Utilization

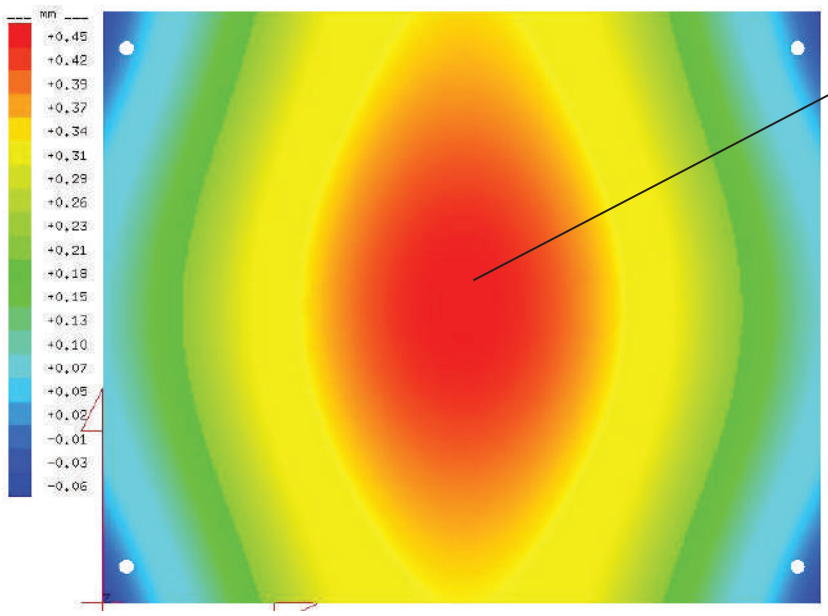

Max. Deflection = 0.02” < L/50 = 0.73” OK

Load Case: DL + LLc

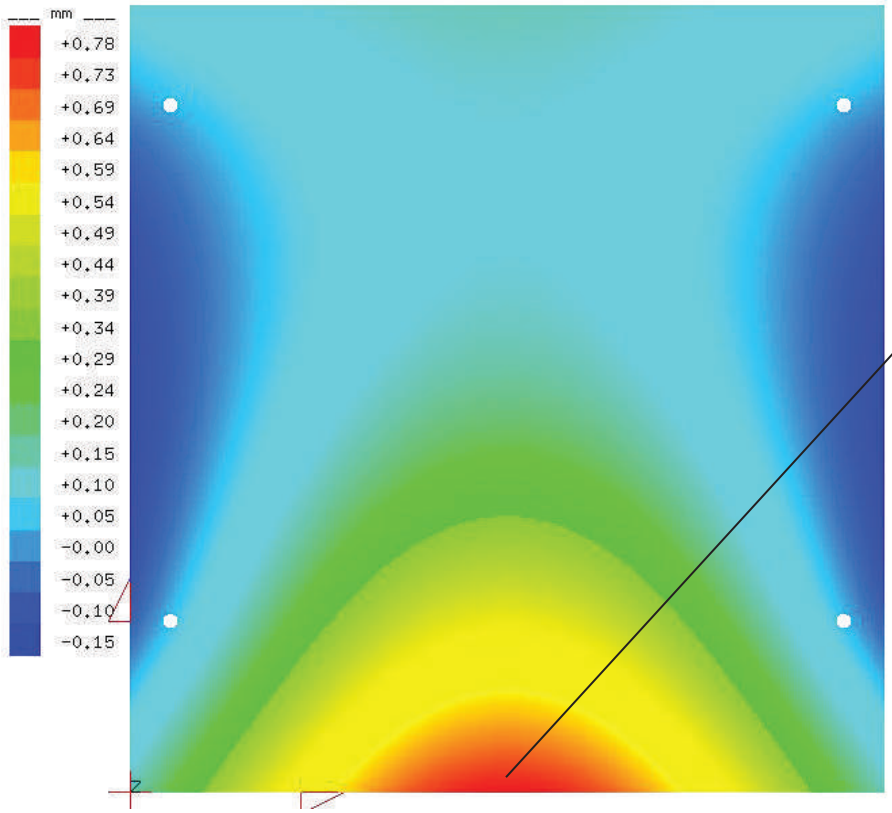

Max. Deflection = 0.03” < L/50 = 0.73” OK

Load Case: DL + LLc

© 2019 R&B Wagner, Inc. All Rights Reserved.
WagnerArchitectural.com

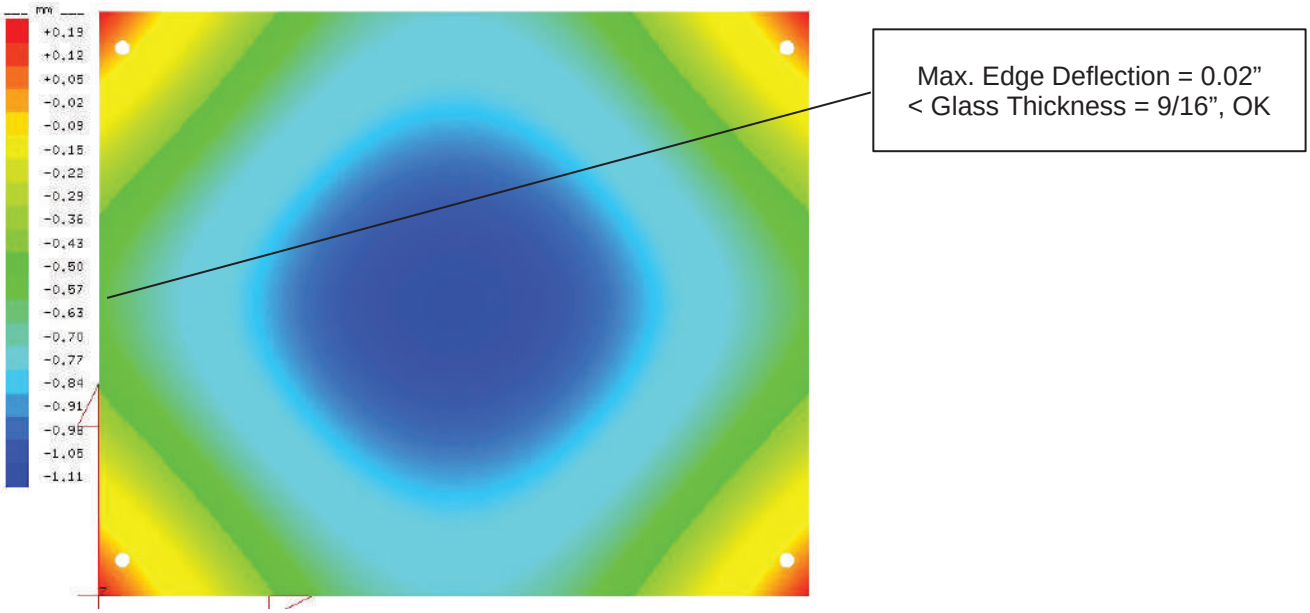

Load Case: DL + LL

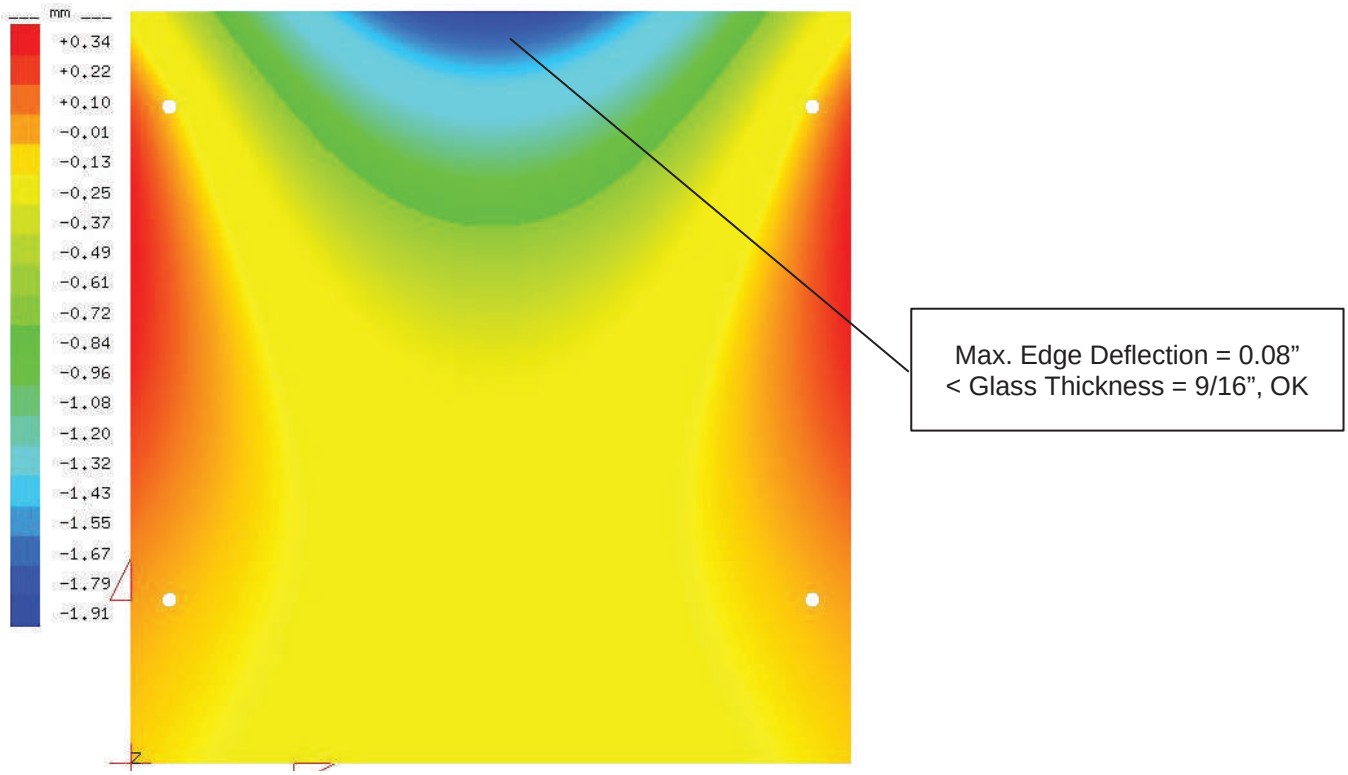

Load Case: DL + LL

© 2019 R&B Wagner, Inc. All Rights Reserved.
WagnerArchitectural.com

7.6. Glass Panel – Spider Clip Series

7.6.1. Glass Panel Dimensions

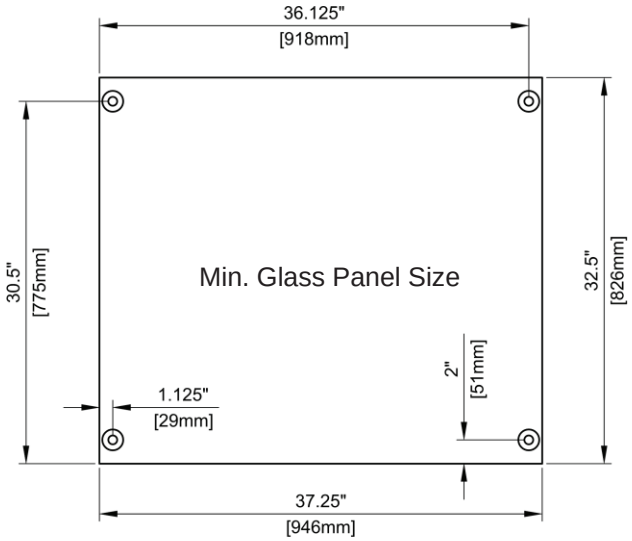

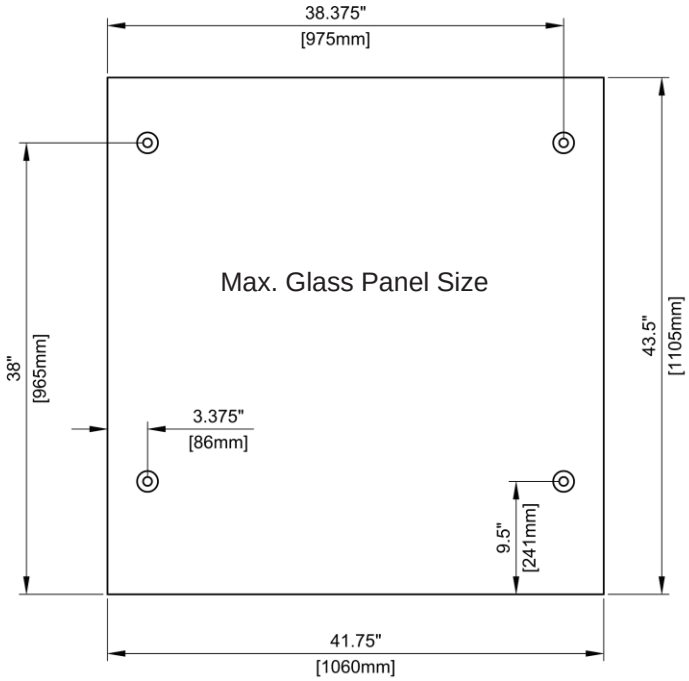

Min. Glass Panel Dimensions (W x H) = 37-1/4” x 32-1/2”.

Max. Glass Panel Dimensions (W x H) = 41-3/4” x 43-1/2”.

Max. and Min. glass dimensions create a design envelope to which the glass analysis applies. They do not guarantee that every glass panel size within these boundaries will fit into the railing system. Follow the applicable railing glass size guideline and standards and consult with the glass manufacturer for manufacturing tolerances.

7.6.2. Glass Composition

7.) 1/4” Fully Tempered Glass
8.) 0.06” SG Interlayer
9.) 1/4” Fully Tempered Glass

Note: Min. glass infill panel nominal thickness = 9/16”. Max. glass infill panel nominal thickness = 11/16”

All glass panels to be fully tempered and laminated with SG interlayer.

7.6.3. Glass Loads

PL = 5psf
LL = 50plf (for deflection purposes only)
LLc = 50lbf

Note: Glass panels are analyzed for all applicable load combinations. Only the governing load combination is shown in the result section.

© 2019 R&B Wagner, Inc. All Rights Reserved.
WagnerArchitectural.com

7.6.4. Stress Utilization

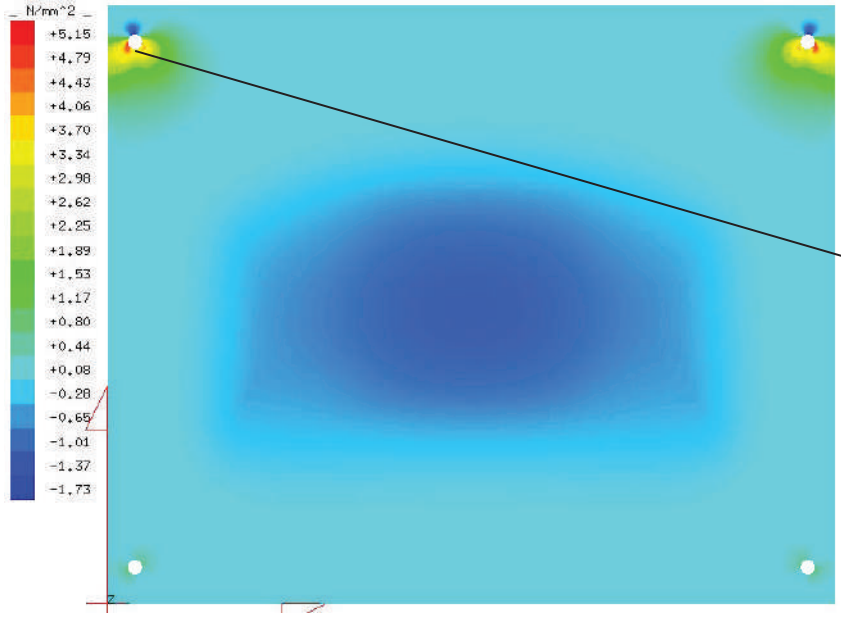

Max. Principal Stress = 5.15 MPa = 750 psi < Allowable Stress = 6,000psi OK

Load Case: DL + LLc

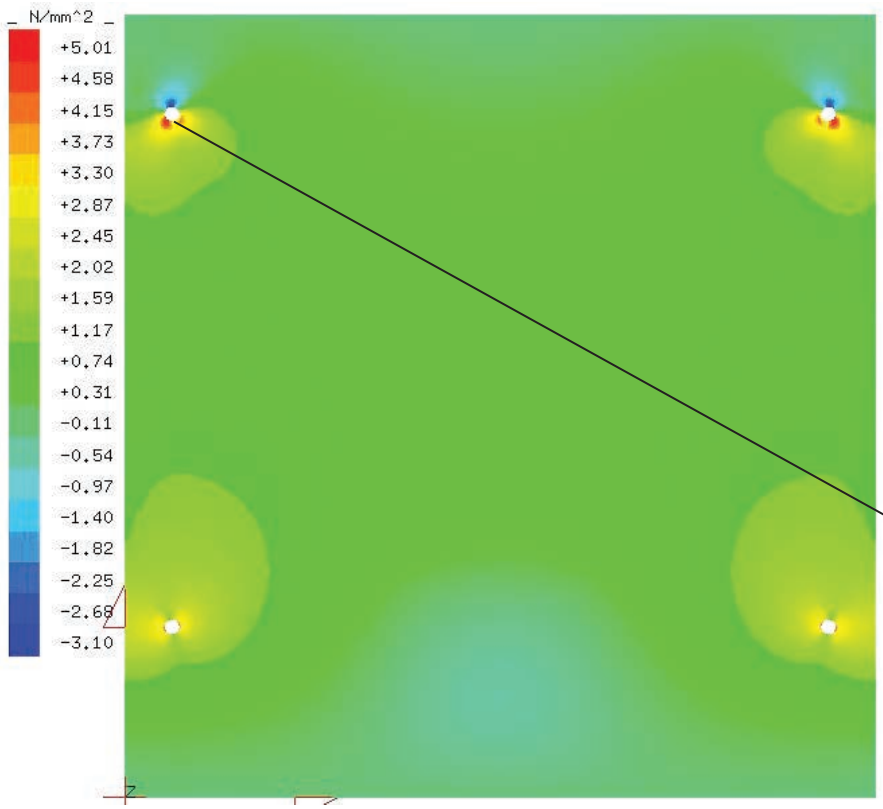

Max. Principal Stress = 5.01 MPa = 730 psi < Allowable Stress = 6,000psi OK

Load Case: DL + LLc

© 2019 R&B Wagner, Inc. All Rights Reserved.
WagnerArchitectural.com

7.6.5. Deflection Utilization

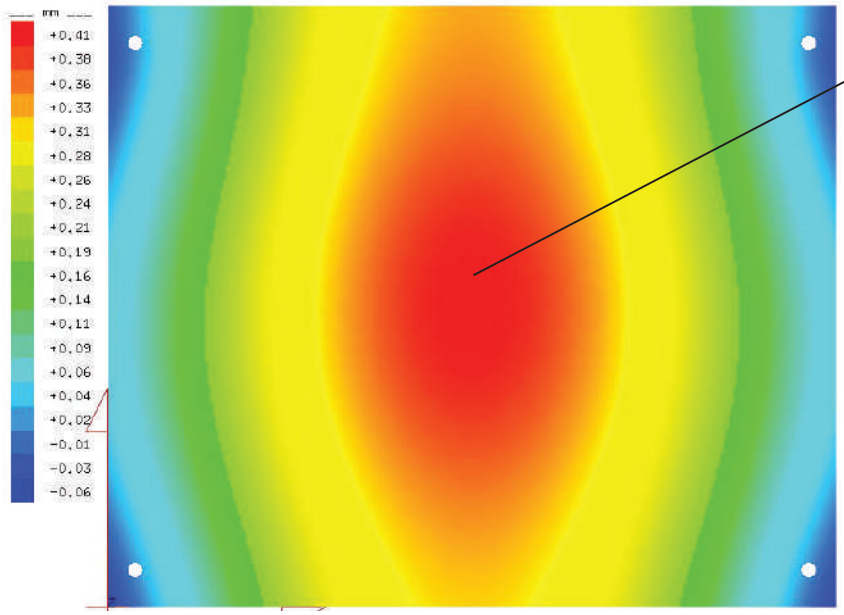

Max. Deflection = 0.02” < L/50 = 0.73” OK

Load Case: DL + LLc

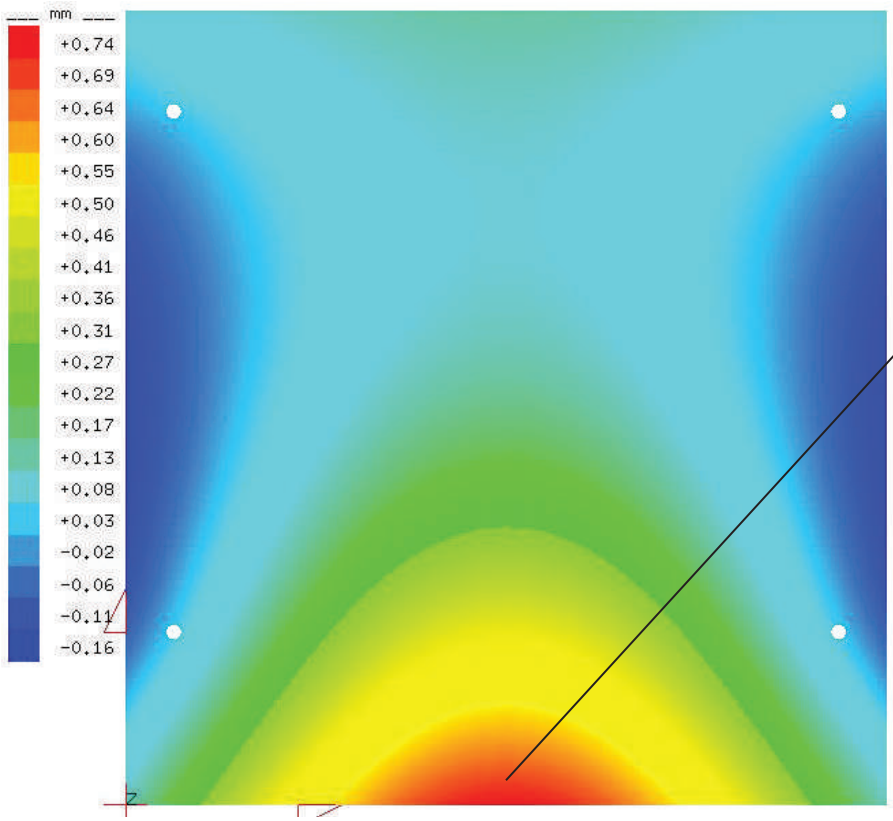

Max. Deflection = 0.03” < L/50 = 0.73” OK

Load Case: DL + LLc

© 2019 R&B Wagner, Inc. All Rights Reserved.
WagnerArchitectural.com

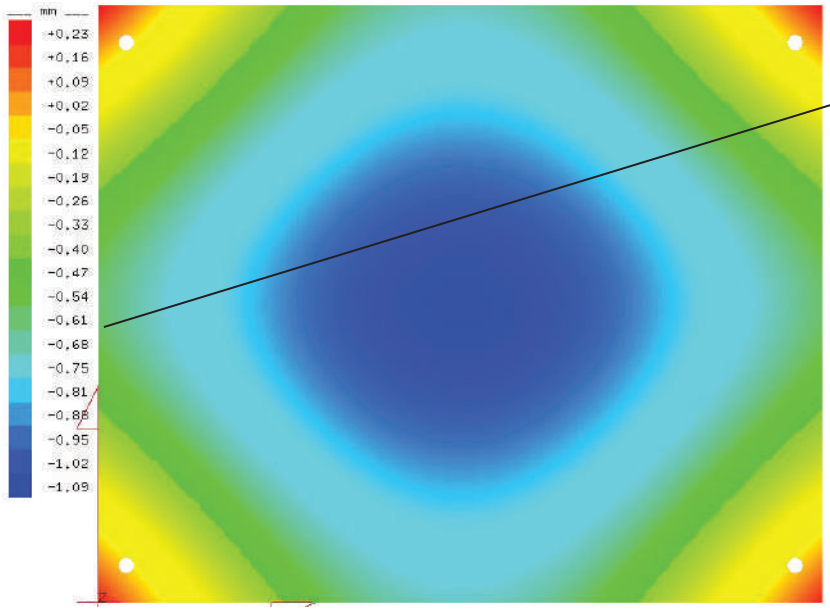

Max. Edge Deflection = 0.02”
< Glass Thickness = 9/16”, OK

Load Case: DL + LL

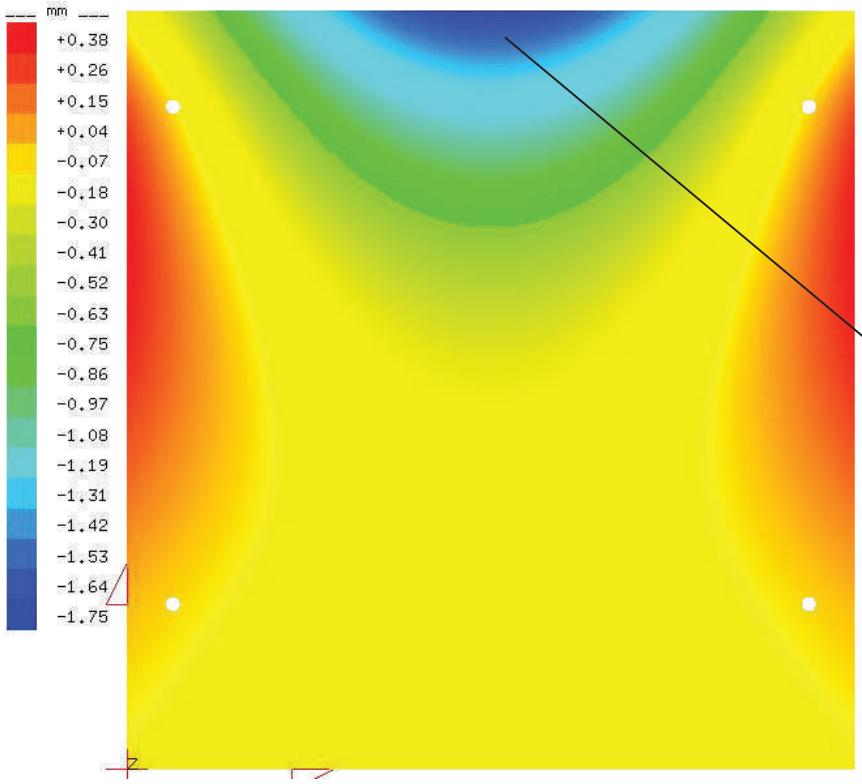

Max. Edge Deflection = 0.07”
< Glass Thickness = 9/16”, OK

Load Case: DL + LL

© 2019 R&B Wagner, Inc. All Rights Reserved.
WagnerArchitectural.com

8. Appendix I – Technical Data

8.1. Test Report P18-0055C

ANDERSON LABORATORIES, INC.
Specialists in Materials Evaluation

HEAVY DUTY WELD FLANGE (1623HD/1623HD-S) TEST REPORT
Report Date: January 18, 2018

Project Number: P18-0055C
Supplement to Project Numbers P18-0055, P18-0055A and P18-0055B

Client: R & B Wagner, Inc. R313
10600 West Brown Deer Road
Milwaukee, WI 53224

Objective
Witness load testing of a statistical sample of R&B Wagner's Heavy-Duty Weld Flange Part Number 1623HD (Drawing "A", Image #1) performed as described in Section 4.5.1 of ASCE 7 in accordance with the International Building Code - Structural Design clause 1607.8.1, report tests outcome, and certify the Weld Flange's functional performance against the stated standards.

Test Conditions and Materials

Test Date: January 10, 2018.

Test Location: The witnessing took place at the R & B Wagner, Inc. facility at 10600 West Brown Deer Road, Milwaukee, WI

Test Materials: Three (3) each of a single baluster (Drawing "B" and Images #4 & #5)
Three (3) each of a rail assembly (Drawing "D", Image #2)

The single baluster assemblies (EXP373, Drawing "B") were comprised of 45" tall by 1.90" OD schedule-#40 316 stainless steel pipe and (1) heavy duty weld flange (part number 1623HD, EXP373, Drawing "A"). The flange was welded to the pipe with a 1/4" continuous fillet weld around the top and bottom. The flange was mounted to the substrate with 3/8" steel bolts.

The rail assemblies (EXP375, Drawing "C") were comprised of (2) balusters constructed as described previously with welded on post tops (LU31904PTAA, EXP375, Drawing "B"), post top cap rail mounting clips (LULSBC75, EXP375, Drawing "B"), and a 60" length of 1.66" stainless steel cap rail (793-0391-02, EXP375, Drawing "B"). The flanges were mounted to the substrate with 3/8" steel bolts.

Loading Equipment: Omega load cell, model LC101/DP25B-S
(Calibration certification 1002032020*)

Measuring Equipment: Measurement Specialties string encoder, PT1A-25-FR-10K-C25
(Calibration certification 1002032022*)

* All calibration records were current (Appendix A)

Procedures and Data

Single balusters were load tested with the load applied 42" above the mounting substrate (Image #4 and #5). The baluster was loaded using a manual hydraulic cylinder with the load cell in the loading chain. The displacement was measured with a spring-loaded string encoder attached opposite the loading point. Loading was applied according to Section 4.5.1 of ASCE 7. Each baluster was loaded to an excess of 500 pounds. The test was run independently on each of the 3 test balusters. The load and displacement reading results appear in Appendix C of this report.

Rail assemblies were side loaded at the midpoint of the cap rail, 30" from either of the balusters and 42" above the mounting substrate. The rail assembly was loaded using a manual hydraulic cylinder with the load cell in the loading chain. The displacement was measured with a spring-loaded string encoder attached opposite the loading point. Loading was applied according to Section 4.5.1 of ASCE 7. Each rail assembly was loaded to an excess of 625 pounds. The test was run independently on each of the 3 test rail assemblies. The load and displacement reading results appear in Appendix C of this report.

Results

After each single baluster 500 pound load test was completed, the baluster, flange, and flange weld were methodically inspected for signs of failure. The baluster itself showed significant plastic deformation, resulting in a permanent set to the baluster. The flange and flange weld exhibited no visual signs of damage or deformation.

After each rail assembly 625 pound load test was completed, the rail, balusters, flanges, and flange welds were all methodically inspected for signs of failure. The rail and the rail mounting clips showed significant plastic deformation, resulting in a permanent set. The balusters also incurred some plastic deformation and permanent set. The flanges and flange welds exhibited no visual signs of damage or deformation.

@wagnercompanies
WAGNER Architectural Systems
888-243-6914 // rfq@mailwagner.com
10600 West Brown Deer Road // Milwaukee, WI 53224, USA
© 2019 R&B Wagner, Inc. All Rights Reserved.
WagnerArchitectural.com

Conclusion

Anderson Laboratories, Inc. certifies that R&B Wagner's 1623HD heavy duty flange, when fabricated and installed as outlined within this test procedure does meet the criteria of the 2015 IBC Section 1607.8.1 when tested as outlined in Section 4.5.1 of ASCE 7. The handrail will withstand a load of 50 pounds per linear foot or a concentrated load of 200 pounds when applying a 2.5 times safety factor of safety.

Anderson Laboratories, Inc.

Rick Pearson
Mechanical Testing Group Leader
AWS Certified SCWI 10080028

@wagnercompanies

WAGNER Architectural Systems
888-243-6914 // rfq@mailwagner.com
10600 West Brown Deer Road // Milwaukee, WI 53224, USA

© 2019 R&B Wagner, Inc. All Rights Reserved.
WagnerArchitectural.com

9. Disclaimers

1.) This engineering document is NOT signed and sealed by a professional engineer. Contact Stutzki Engineering, Inc. for a project specific review if sign and seal is required as well as a list of licensed and registered states.

2.) This engineering report includes engineering only for the system and components shown in the project description. If the railing is outside the parameters of this report (including size, loading, concrete anchor spacing, etc.), it is not covered by this report and should be reviewed by a professional engineer. Contact Stutzki Engineering, Inc. if special cases must be considered.

3.) Prior to installation, all glass shall be inspected for cracks, chips and other imperfections. Any imperfection shall be grounds for inspection by the supplier. A broken lite shall be grounds for immediate replacement. The supporting system, supplied and analyzed by others, shall resist horizontal sliding and vertical separation of the glass during service loads without imposing external loads from the surrounding structure into the glass. Proper spacing shall be used for adjacent pieces of glass to allow for thermal expansion and small movements during service. Appropriate fillet radiuses shall be used at all interior corners to reduce stress concentrations.

4.) All dissimilar metals should be separated and/or protected from water and humidity. Detailing responsibility for this condition is by others.

5.) Only items within the scope of Stutzki Engineering are designed in this report. The supporting structure (including local effects at the connection interface) are designed by others and must resist the reaction loads given in this report. The stiffness of the supporting structure (analyzed by others) must not cause the handrail system to over-deflect.

6.) This document does not include Windborne-Debris-Impact Resistance design and/or certification.

7.) All laminated glass and fully tempered monolithic glass must be considered Safety Glazing per applicable building codes. Compliance with this requirement is to be done by the glass manufacture.

© 2019 R&B Wagner, Inc. All Rights Reserved.
WagnerArchitectural.com

10. Stutzki Engineering

Stutzki Engineering, Inc. is an engineering consulting firm, offering and executing engineering services for architects and building contractors in the field of structural glass, lightweight structures, and building facades. Our engineering solutions help them make their product unique.

The ideas and methods of Stutzki Engineering, Inc. are based on a long tradition of academic research and industrial development, as represented by persons like Buckminster Fuller, Frei Otto, John Argyris, Max Mengeringhausen and Herbert Klimke. The idea behind the company is to combine state of the art engineering and applied science with creative industrial design.

241 N. Broadway, Suite 302
Milwaukee, WI 53202
USA.

Phone: (414) 455-4815

http://www.stutzkiengineering.com

© 2019 R&B Wagner, Inc. All Rights Reserved.
WagnerArchitectural.com

LEGATO™
GLASS RAILING POST SYSTEM
SQUARE

Application Guideline
&
Supporting Design Calculations

Prepared for Wagner Architectural Systems
By Stutzki Engineering, INC
Milwaukee, WI
Orig. Issue: July 8, 2019

888-243-6914 // rfq@mailwagner.com
10600 West Brown Deer Road // Milwaukee, WI 53224, USA

© 2019 R&B Wagner, Inc. All Rights Reserved.
WagnerArchitectural.com

Table of Contents

1. Project Description 3
2. Codes, Standards, and References 5
3. Design Loads 5
   3.1. Dead Load 5
   3.2. Interior Pressure Load 5
   3.3. Live Load 5
   3.4. Load Combinations 5
4. Railing Component Design 6
   4.1. Design Criteria 6
   4.2. Overall Geometry and Location 6
   4.3. Structural Analysis 7
   4.4. Stress Utilization 9
   4.5. Deflection Utilization 11
5. Railing Support Design 12
   5.1. Reaction Summary 12
   5.2. Design Criteria 12
   5.3. Surface Mounted Bracket Design 13
   5.4. Facia Mounted Bracket Design 23
6. Railing Connection Design 37
   6.1. Design Criteria 37
   6.2. Overall Geometry and Location 37
   6.3. Glass Clip 38
   6.4. Flat Clip 45
   6.5. Spider Clip 50
   6.6. Handrail Connection 60
7. Railing Glass Design 63
   7.1. General Design Criteria 63
   7.2. SG Interlayer 63
   7.3. Overall Location and Geometry 63
   7.4. Glass Panel – Glass Clip Series 64
   7.5. Glass Panel – Flat Clip Series 68
   7.6. Glass Panel – Spider Clip Series 72
8. Appendix I – Technical Data 76
   8.1. Test Report P18-0055C 76
9. Disclaimers 79
10. Stutzki Engineering 80

© 2019 R&B Wagner, Inc. All Rights Reserved.
WagnerArchitectural.com

1. Project Description

This report pertains to the Wagner interior glass guardrail system – Legato Square System. This report covers design of all handrail components that are installed in accordance with Wagner recommendations and within the defined design parameters. The scope of work includes handrail post and railing design, glass panel analysis, glass clip design, post bracket design, and anchorage design. The support structure design (steel plate or concrete slab) are outside of the scope of this report.

Design Parameters for Surface Mounted System:

Geometry:

- Height of railing above finished floor = 42”
- Max. post height = 42”
- Max. post spacing = 42”

Loads:

- Railing complies with applicable loads per 2015 IBC
- Handrail linear load = 50plf @ 42” AFF
- Handrail concentrated load = 200lbf @ 42” AFF
- Infill panel linear load = 50plf up to 42” AFF (deflection purposes only)
- Infill panel concentrated load = 50lbf over 1ft x 1ft area.

Glass:

- All glass plies to be fully tempered
- All glass panels to be laminated with Sentry Glass (SG) interlayer
- Min. glass makeup = 1/4" FT glass + 0.06” SG interlayer + 1/4" FT glass
- Max. glass makeup = 5/16" FT glass + 0.06” SG interlayer + 5/16" FT glass
- Glass processing to conform with ASTM C1048, manufacturer’s processing criteria, and Wagner glass sizing recommendation

Anchors in Concrete:

- Use Hilti HUS-HR M10 anchor with 3.563” min. embedment depth
- Min. concrete strength: f’c = 4000psi @ 28 days
- Normal weight concrete
- Cracked concrete conditions
- Min. anchor edge distance = 4” (after installation)
- Min. slab thickness = 6”
- Concrete slab design is outside of the scope of this report

Anchors in Steel Plate:

- Use 1/2”-13 stainless steel bolt, condition A or better
- Bolt can be tapped or through bolt
- For tapped bolts min. steel plate strength: Fy = 36ksi, Fu = 58ksi
- For tapped bolts min. bolt thread engagement = 3/8”
- Steel plate design is outside of the scope of this report

© 2019 R&B Wagner, Inc. All Rights Reserved.
WagnerArchitectural.com

Design Parameters for Facia Mounted System:

Geometry:

- Height of railing above finished floor = 42”
- Max. post assembly height (post with bracket) = 50-1/2”
- Max. post spacing = 42”

Loads:

- Railing complies with applicable loads per 2015 IBC
- Handrail linear load = 50plf @ 42” AFF
- Handrail concentrated load = 200lbf @ 42” AFF
- Infill panel linear load = 50plf up to 42” AFF (deflection purposes only)
- Infill panel concentrated load = 50lbf over 1ft x 1ft area.

Glass:

- All glass plies to be fully tempered
- All glass panels to be laminated with Sentry Glass (SG) interlayer
- Min. glass makeup = 1/4" FT glass + 0.06” SG interlayer + 1/4" FT glass
- Max. glass makeup = 5/16" FT glass + 0.06” SG interlayer + 5/16" FT glass
- Glass processing to conform with ASTM C1048, manufacturer’s processing criteria, and Wagner glass sizing recommendation

Anchors in Concrete:

- Use Hilti HUS-HR M10 anchor with 3.563” min. embedment depth
- Min. concrete strength: f’c = 4000psi @ 28 days
- Normal weight concrete
- Uncracked concrete conditions
- Min. anchor edge distance = 4” (after installation)
- Min. slab thickness = 6”
- Concrete slab design is outside of the scope of this report

Anchors in Steel Plate:

- Use 1/2”-13 stainless steel bolt, condition A or better
- Bolt can be tapped or through bolt
- For tapped bolts min. steel plate strength: Fy = 36ksi, Fu = 58ksi
- For tapped bolts min. bolt thread engagement = 3/8”
- Steel plate design is outside of the scope of this report

© 2019 R&B Wagner, Inc. All Rights Reserved.
WagnerArchitectural.com

2. Codes, Standards, and References

1) 2015 International Building Code
2) AAMA TIR A9-14 Metal Curtain Wall Fasteners
3) ACI 318–14 Building Code Requirements for Structural Concrete
4) AISC 360-10 Specification for Structural Steel Buildings and AISC 14th ed
5) AISC Design Guide 27 "Structural Stainless Steel"
6) ASCE7-10 Minimum Design Loads for Buildings and Other Structures
7) ASTM C1048 Standard Specification for Heat Treated Flat Glass
8) ASTM E1300-16 Standard Practice for Determining Load Resistance of Glass in Buildings

3. Design Loads

3.1. Dead Load

Glass = 13.2psf/in of glass x (5/16" glass + 0.06" Interlayer + 5/16" glass) = 9psf

Stainless Steel = 490pcf

3.2. Interior Pressure Load

PL = 5psf (ASD) Interior Air Pressure (2015 IBC, Section 1607.14)

3.3. Live Load

Handrail Assemblies and Guards shall be designed to resist the following loads:
Linear Live Load = 50plf at 42" above Surface (2015 IBC, Section 1607.8.1)
Concentrated Live Load = 200lbf (2015 IBC, Section 1607.8.1.1)

Other Infill Panels shall withstand the following loads:
Concentrated Live Load = 50lbf distributed over 1 sq ft (2015 IBC, Section 1607.8.1.1)

3.4. Load Combinations

1. Dead + Concentrated Live
2. Dead + Linear Live
3. Dead + Interior Air Pressure

© 2019 R&B Wagner, Inc. All Rights Reserved.
WagnerArchitectural.com

4. Railing Component Design

4.1. Design Criteria

4.1.1. Stainless Steel

316 Stainless Steel Fy = 30 ksi, min Fu = 70 ksi, min

4.1.2. Deflection Criteria

Max. Deflection = 2L/50

4.2. Overall Geometry and Location

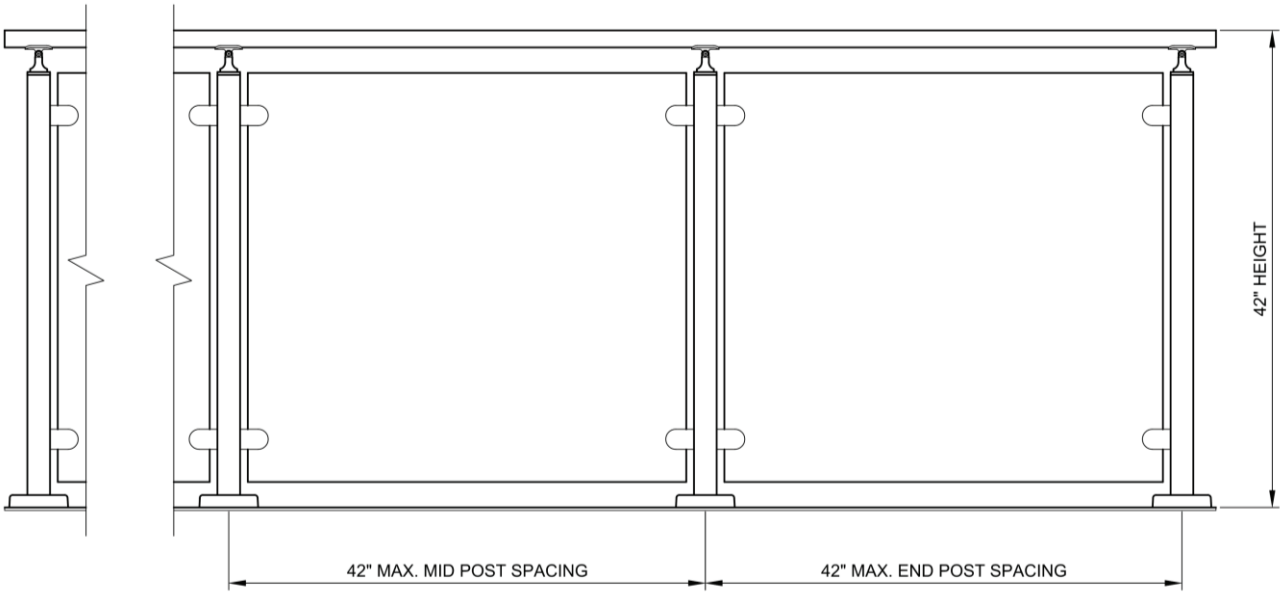

Surface Mounted System

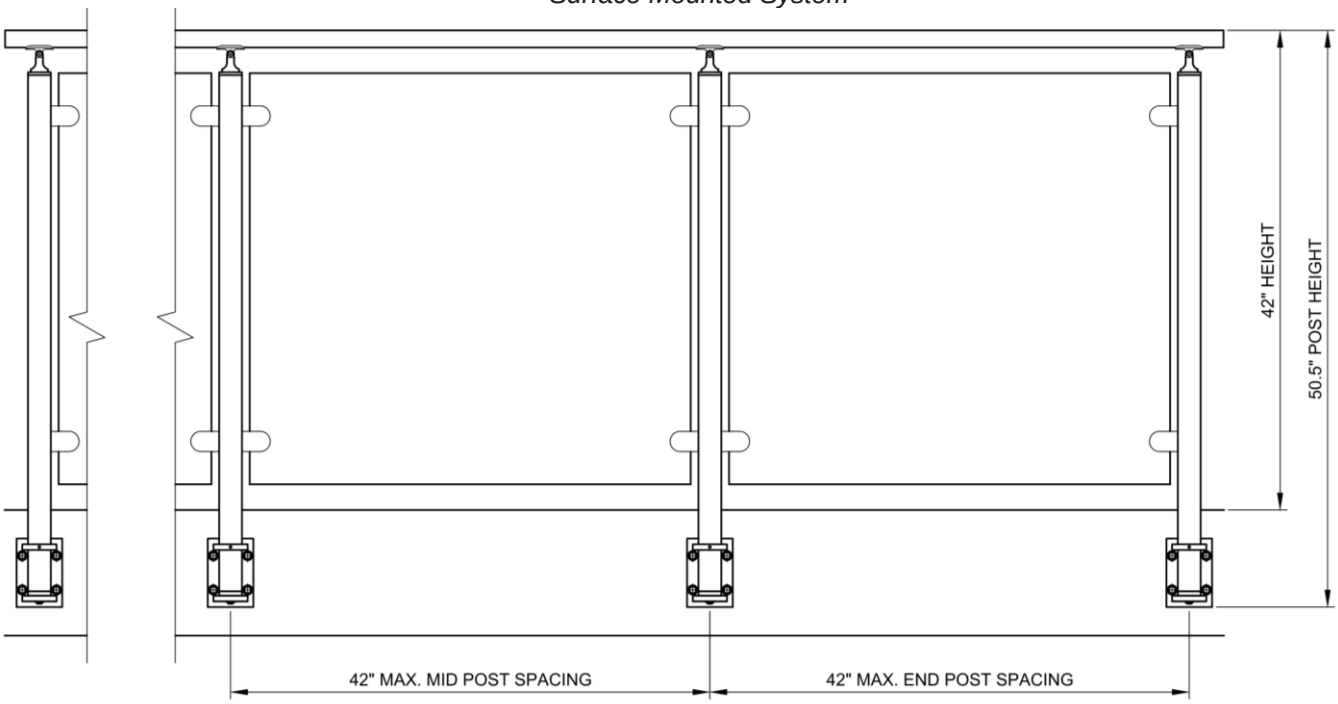

Facia Mounted System

4.3. Structural Analysis

4.3.1. Model Dimensions

Posts to be 316 SS 2”x2”x1/8” square HSS. Handrail to be 316 SS 1-1/2” outside dia. tube with 0.120” thick wall.

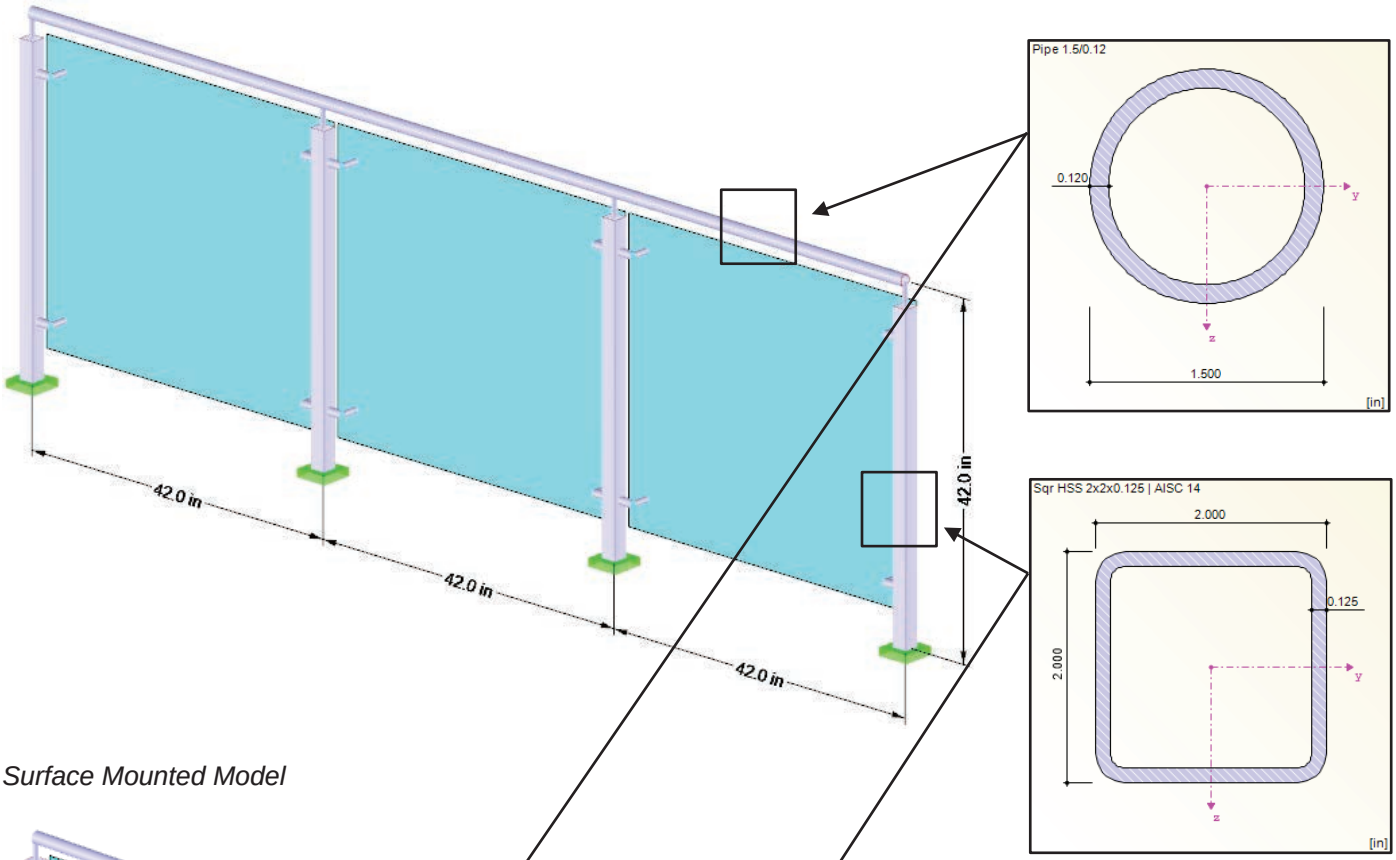

Surface Mounted Model

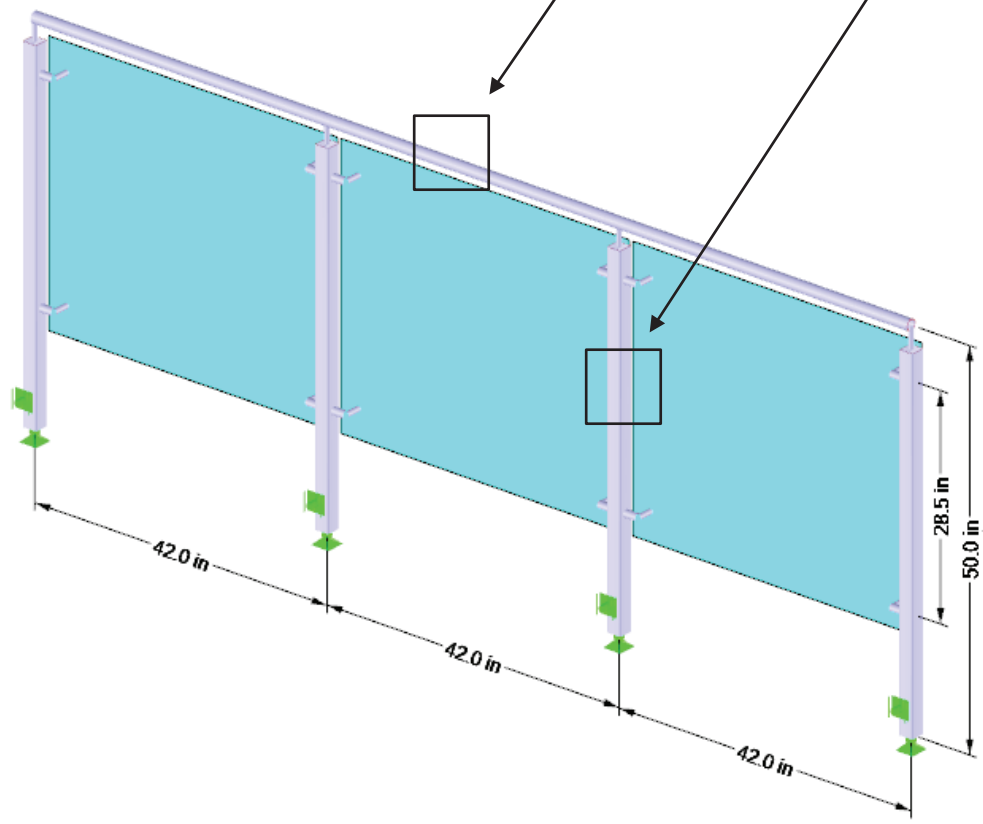

Facia Mounted Model

4.3.2. Model Loads

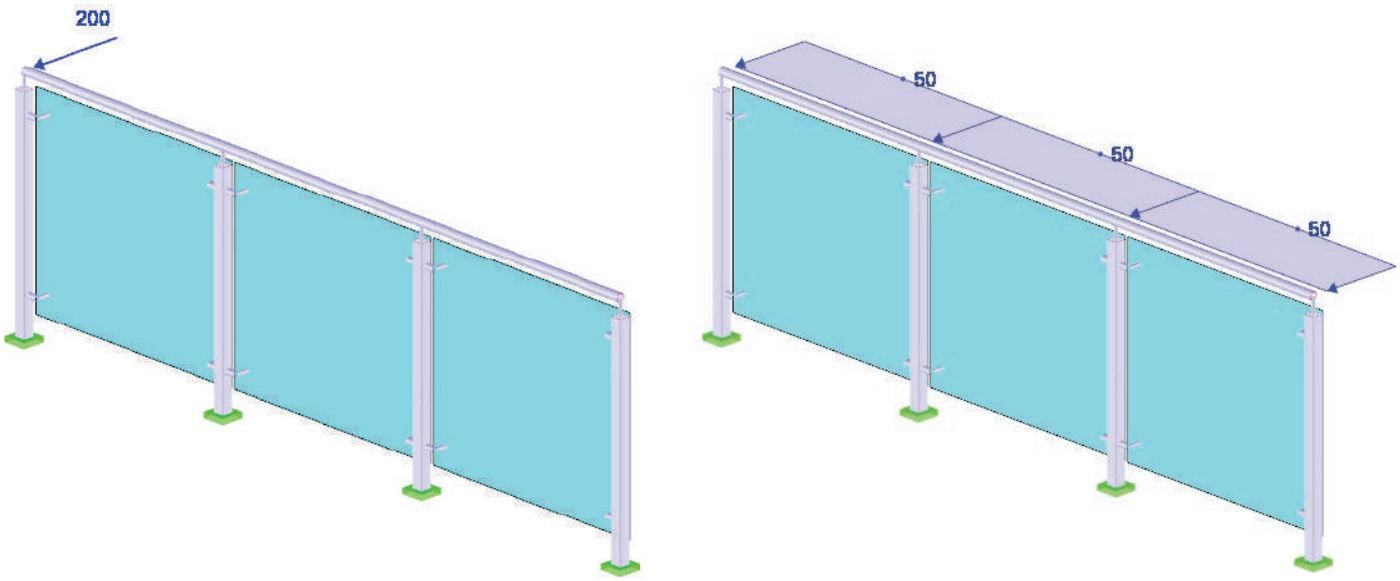

Surface Mounted Model

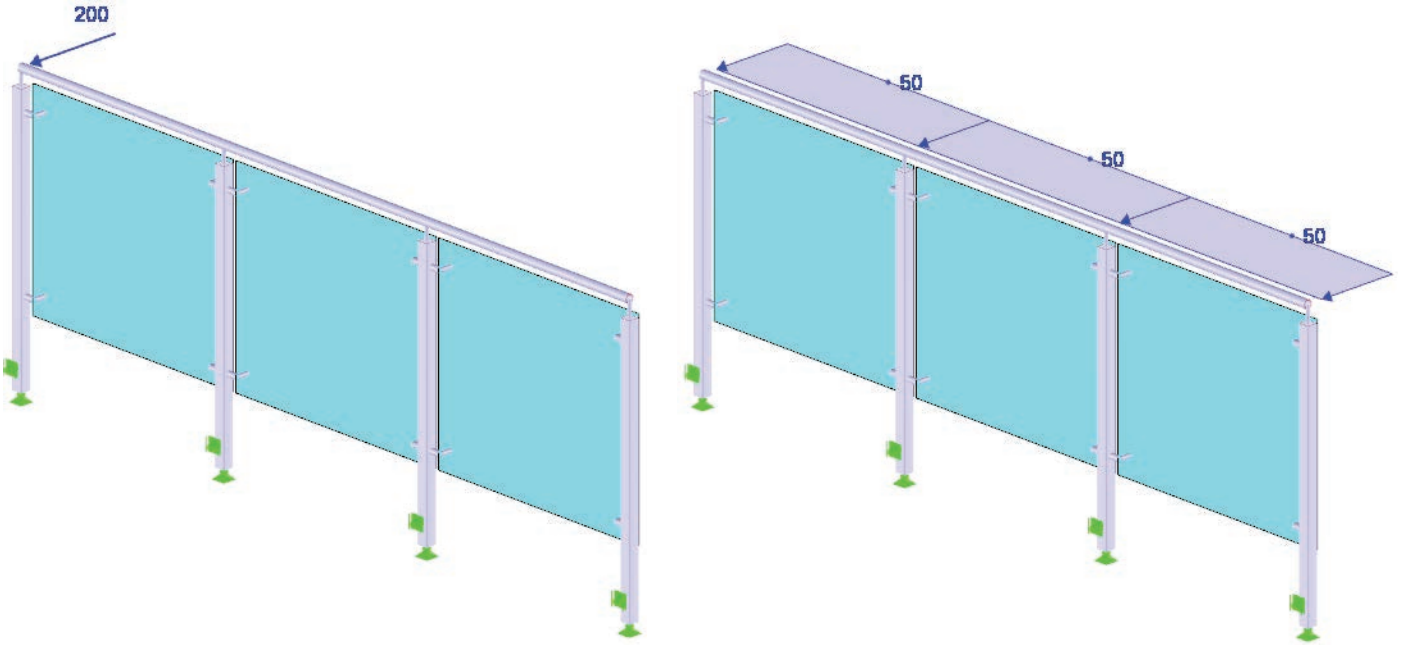

Facia Mounted Model

© 2019 R&B Wagner, Inc. All Rights Reserved.
WagnerArchitectural.com

4.4. Stress Utilization

The handrail components were analyzed per the AISC manual. The software output shows the governing envelope utilization of railing members.

4.4.1. Surface Mounted System

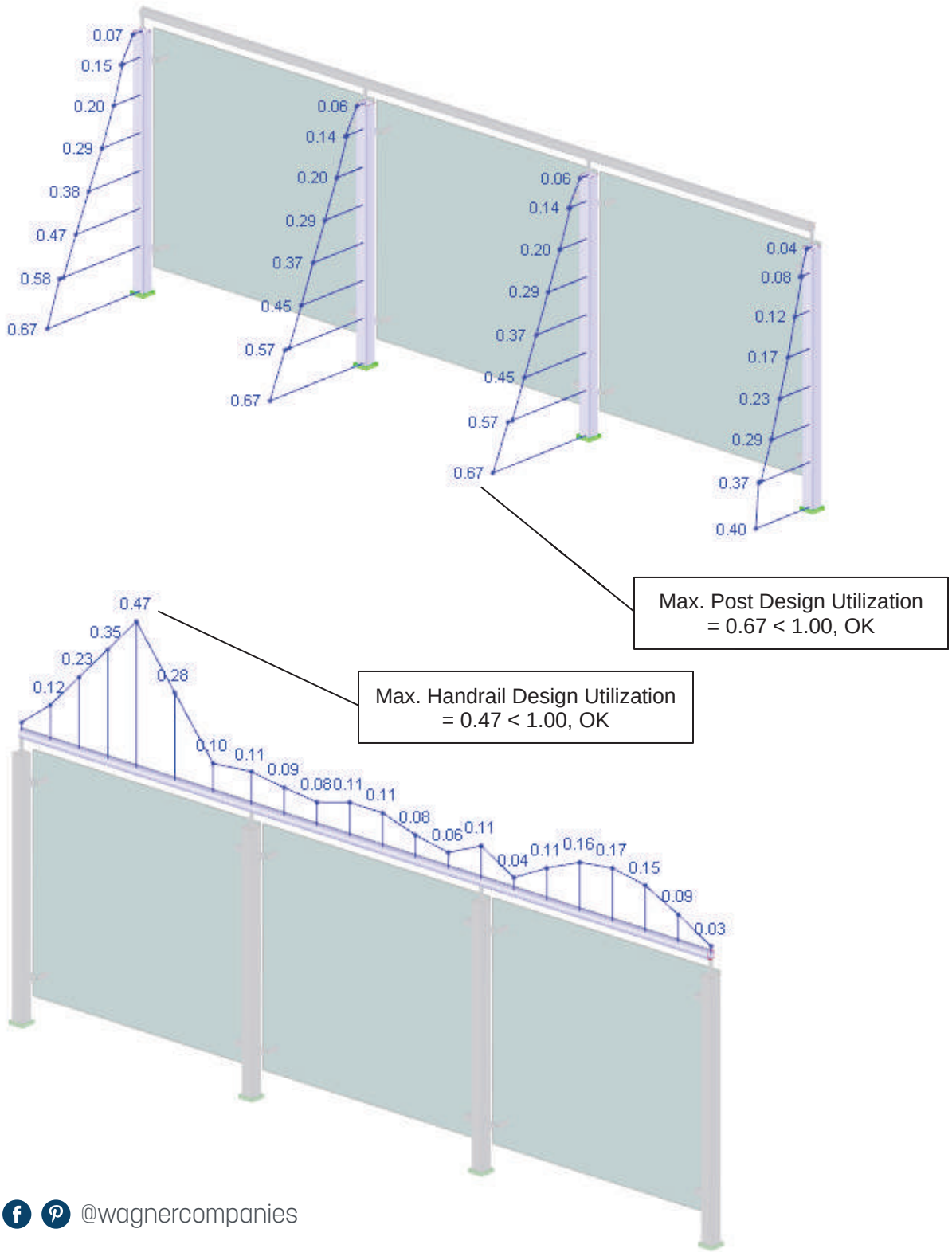

© 2019 R&B Wagner, Inc. All Rights Reserved.
WagnerArchitectural.com

4.4.2. Facia Mounted System

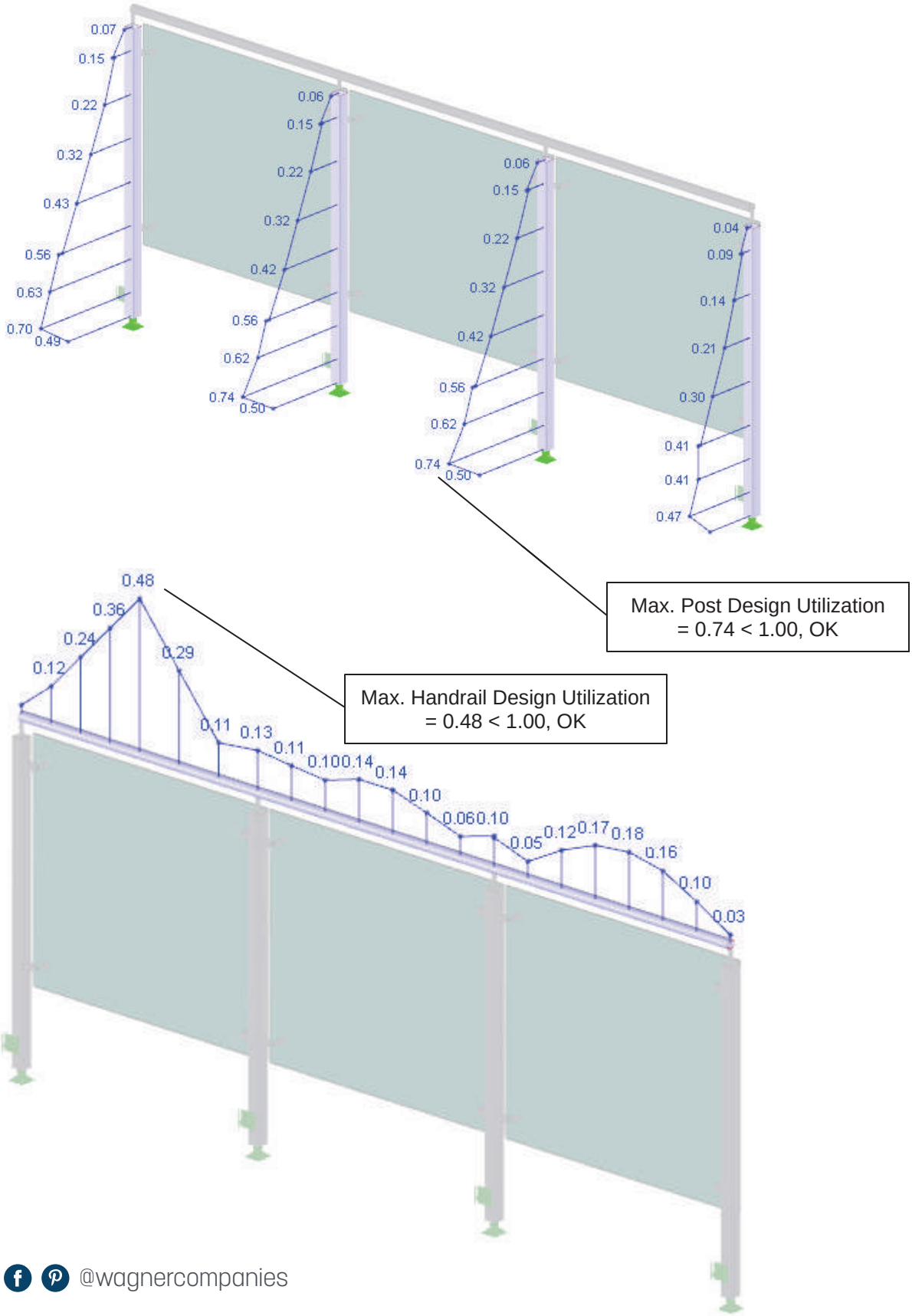

© 2019 R&B Wagner, Inc. All Rights Reserved.
WagnerArchitectural.com

4.5. Deflection Utilization

4.5.1. Surface Mounted System

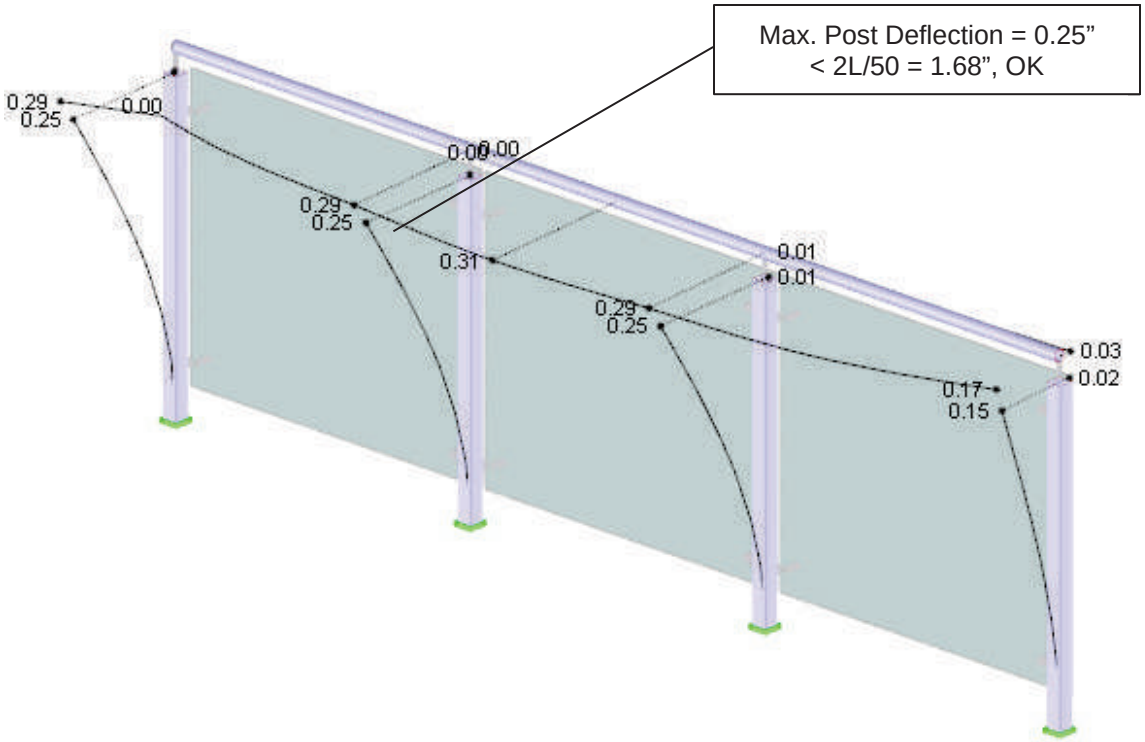

4.5.2. Facia Mounted System

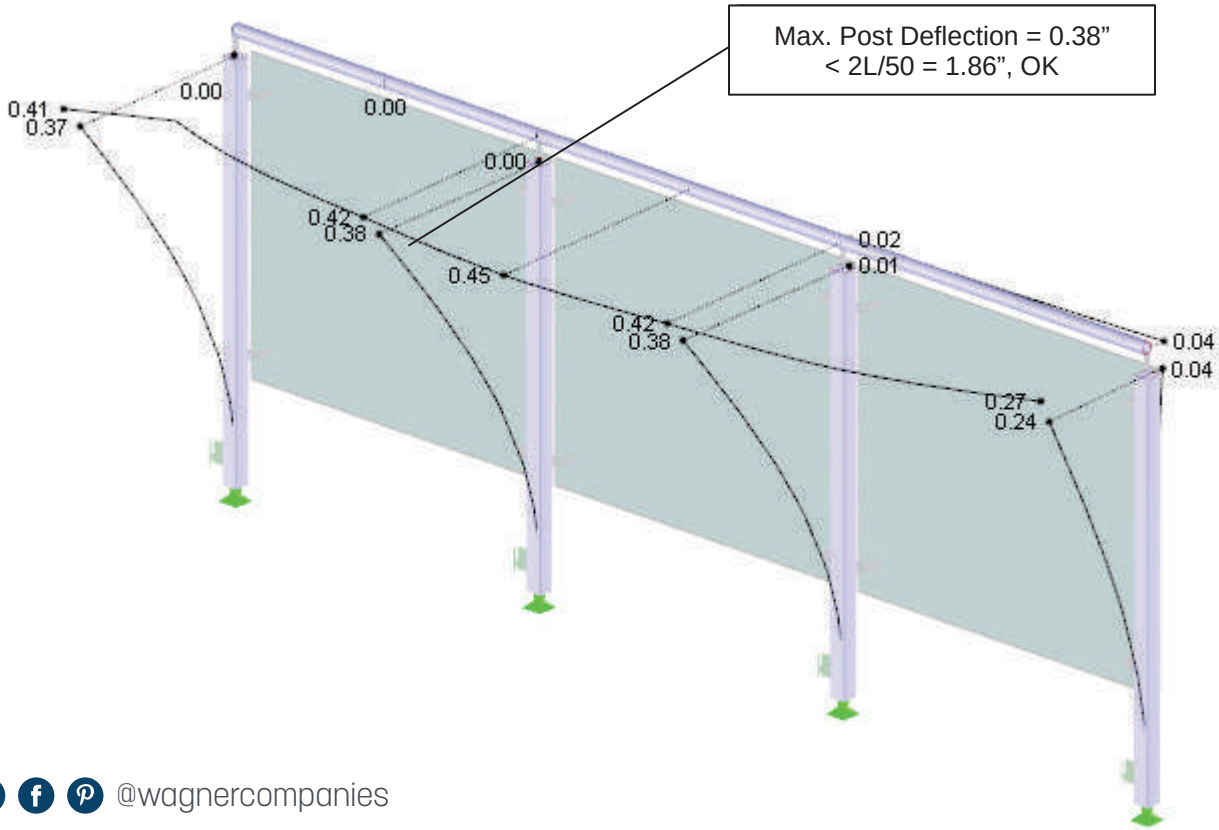

© 2019 R&B Wagner, Inc. All Rights Reserved.
WagnerArchitectural.com

5. Railing Support Design

5.1. Reaction Summary

The following forces (ASD Level) are transferred from analyzed components to the supporting structure designed by others. The supporting structure must be able to withstand these forces. This to be designed by others.

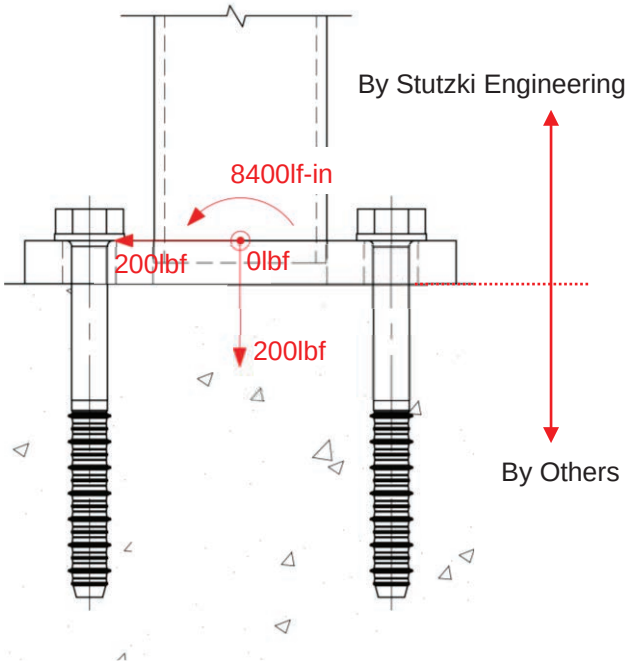

Section View through Surface Mounted Bracket

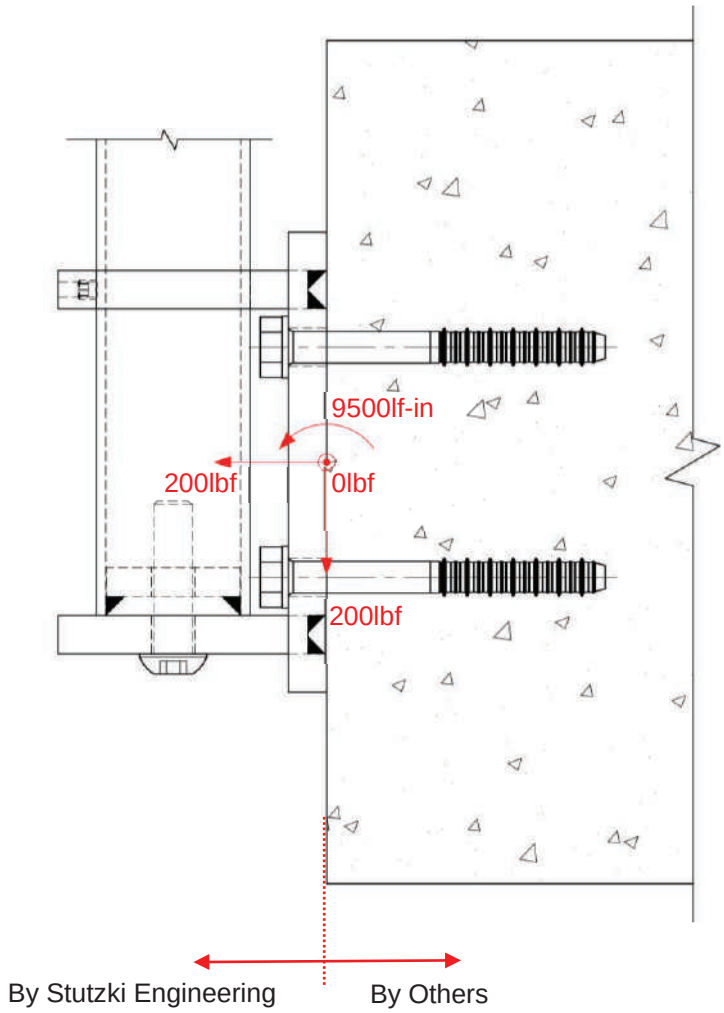

Section View through Facia Mounted Bracket

5.2. Design Criteria

5.2.1. Anchors

Hilti HUS-HR		Fu = 137.75 ksi, min

5.2.2. Concrete

Normal Weight Concrete		f'c = 4000psi @ 28 days

5.2.3. Fasteners

316 SS Bolts, Condition A	Fy = 30 ksi, min	Fu = 75 ksi, min
316 SS Bolts, Condition CW	Fy = 65 ksi, min	Fu = 100 ksi, min

5.2.4. Stainless Steel

316 SS	Fy = 30 ksi, min	Fu = 70 ksi, min

5.3. Surface Mounted Bracket Design

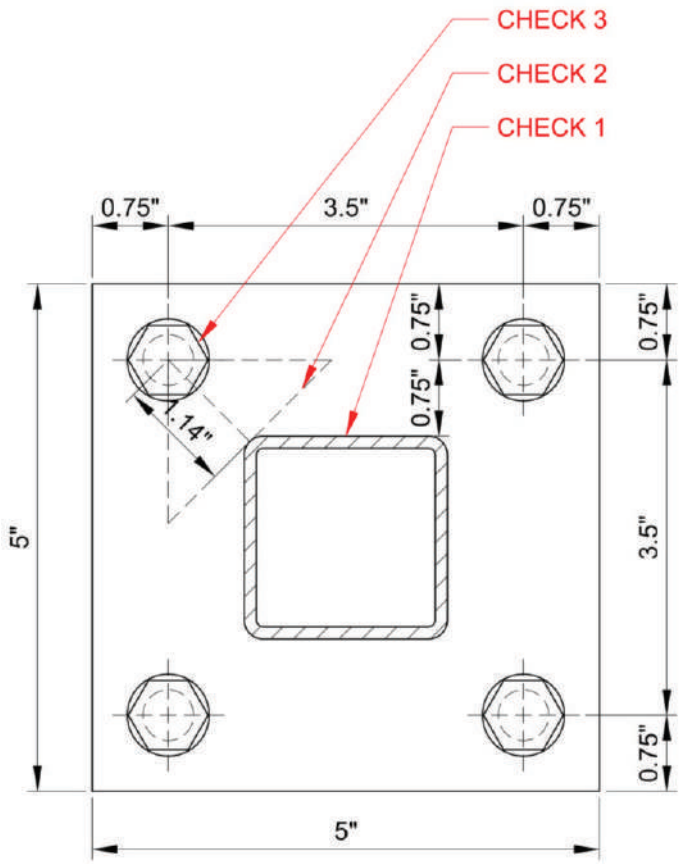

Connection Detail

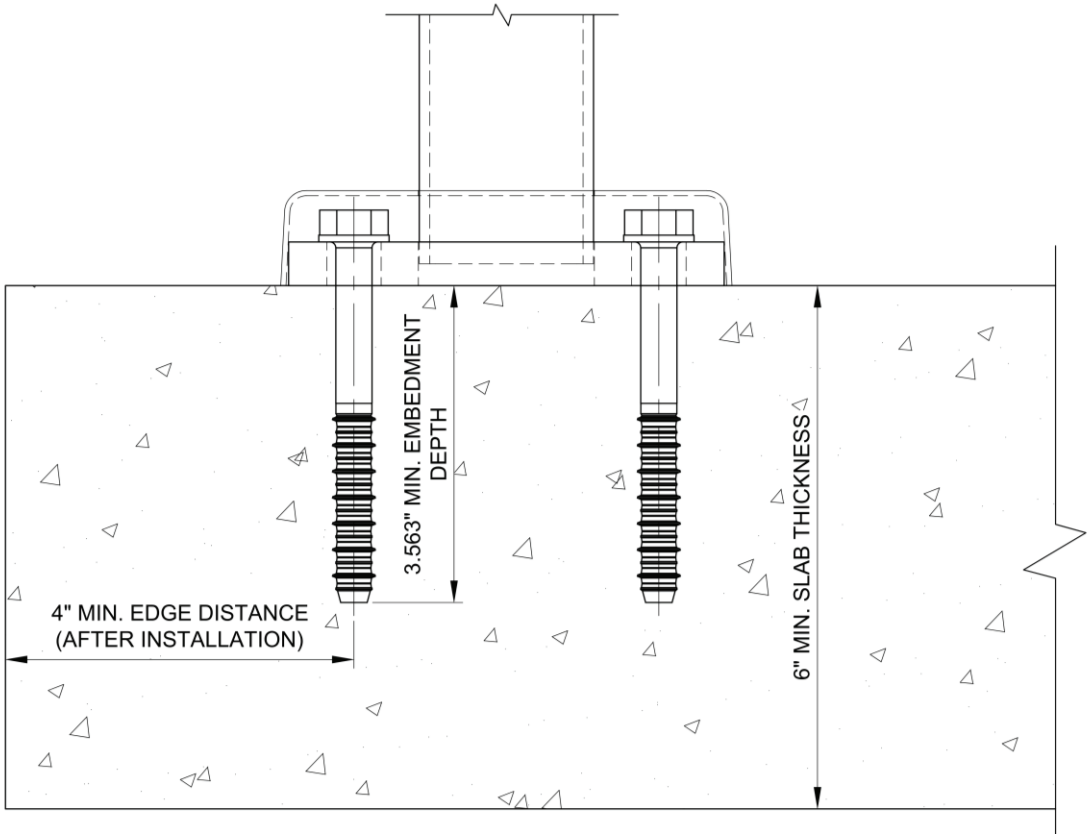

Connection Detail

Loads (ASD)

$DL := 200 \cdot lbf$ $\qquad$ $R := 200 \cdot lbf$

#1 Check 4-Sided Weld

1/4" Fillet Weld, 70ksi Min. Filler Strength, All-Around

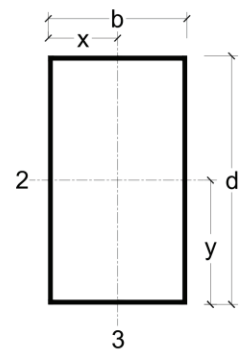

Input

$d_1 := 2.0in$ $\qquad$ $b_1 := 2.0in$

$y_1 := \frac{d_1}{2} = 1\,in$ $\qquad$ $x_1 := \frac{b_1}{2} = 1\,in$

Properties

$L_{1w} := 2 \cdot d_1 + 2 \cdot b_1 = 8\,in$

$S_{1w2} := \frac{d_1}{3} \cdot (3 \cdot b_1 + d_1) = 5.33\,in^2$

$S_{1w3} := \frac{b_1}{3} \cdot (3 \cdot d_1 + b_1) = 5.33\,in^2$

$J_{1w} := \frac{(b_1 + d_1)^3}{6} = 10.7\,in^3$

Forces

$N_1 := DL = 0.2 \cdot kip$ $\qquad$ $V_{1.2} := 0.0 \cdot lbf$ $\qquad$ $V_{1.3} := R = 0.2 \cdot kip$

$T_1 := 0 \cdot kip \cdot in$ $\qquad$ $M_{1.2} := R \cdot 43 \cdot in = 8.6\,in \cdot kip$ $\qquad$ $M_{1.3} := 0 \cdot kip \cdot in$

Weld Stress

Normal Stress $\qquad$ $F_{wN} := \frac{N_1}{L_{1w}} + \frac{M_{1.2}}{S_{1w2}} + \frac{M_{1.3}}{S_{1w3}} = 1.64 \cdot \frac{kip}{in}$

Shear Stress $\qquad$ $F_{wV} := \sqrt{\left(\frac{V_{1.3}}{L_{1w}} + \frac{T_1 \cdot x_1}{J_{1w}}\right)^2 + \left(\frac{V_{1.2}}{L_{1w}} + \frac{T_1 \cdot y_1}{J_{1w}}\right)^2} = 0.03 \cdot \frac{kip}{in}$

Total Stress $\qquad$ $F_{w1} := \sqrt{F_{wN}^2 + F_{wV}^2}$ $\qquad$ $\boxed{F_{w1} = 1.64 \cdot \frac{kip}{in}}$

Capacity

Weld filler metal tensile strength $\qquad$ $F_{E1} := 70 \cdot ksi$

Effective Weld Throat $\qquad$ $E1 := \frac{\sqrt{2}}{2} \cdot \left(\frac{4}{16}\right) in = 0.18 \cdot in$ $\qquad$ $\Omega_1 := 2.7$

Allowable Stress $\qquad$ $f_{w1} := 0.6 \cdot F_{E1} \cdot E1 = 7.42 \cdot \frac{kip}{in}$ $\qquad$ $\boxed{\frac{f_{w1}}{\Omega_1} = 2.75 \cdot \frac{kip}{in}}$

Interaction

$IR1_1 := F_{w1} \div \frac{f_{w1}}{\Omega_1} = 0.6$ $\qquad$ $\boxed{CheckASD1 = \text{"OK"}}$

#2 Check Base Plate for Bending

5" x 5" x 1/2" Plate, 316 Stainless Steel

Properties:

$t_2 := 0.50 \cdot in$ $\quad b_2 := 2.28 \cdot in$ $\quad F_{y2} := 30 \cdot ksi$ $\quad Z_{w2} := 0.25 \cdot b_2 \cdot t_2^2 = 0.14\,in^3$

Force

Bolt Tension $\quad T_2 := \frac{R}{2 \cdot Bolts} \cdot \frac{43 \cdot in}{85\% \cdot 4.25 \cdot in} = 1.19 \cdot kip$

Weak Axis Moment $\quad M_2 := T_2 \cdot 1.14 \cdot in = 1.36 \cdot kip \cdot in$

Capacity

$\Omega_2 := 1.67$

Weak Axis Moment $\quad M_{n2} := \frac{F_{y2} \cdot Z_{w2}}{\Omega_2} = 2.56\,in \cdot kip$

Interaction

$IR1_2 := \frac{M_2}{M_{n2}} = 0.53$ $\quad$ CheckASD2 = "OK"

© 2019 R&B Wagner, Inc. All Rights Reserved.
WagnerArchitectural.com

#3 Check Bolt Capacity

(4) - 1/2"-13 Bolts, 316 Stainless Steel, Condition A, Tapped in Min. 3/8" Thick A36 Plate (or Better)

Properties:

$d_{b3} := 0.50 \cdot in$ $\quad F_{y3} := 30 \cdot ksi$ $\quad F_{u3} := 75ksi$ $\quad N_3 := 13 \cdot \frac{1}{in}$

$LE_3 := 0.375 \cdot in$ $\quad F_{us3} := 58ksi$ $\quad SF_3 = 2.5$

$F_{nt3} := \min\left(0.75 \cdot F_{y3}, \frac{1}{SF_3} \cdot F_{u3}\right) = 22.5 \cdot ksi$ $\quad F_{nv3} := \min\left(0.75 \cdot F_{y3} \div \sqrt{3}, \frac{1}{SF_3} \cdot F_{u3} \div \sqrt{3}\right) = 12.99 \cdot ksi$

$A_{S3} := 0.7854 \cdot \left(d_{b3} - \frac{0.9743}{N_3}\right)^2 = 0.142\, in^2$ $\quad A_{R3} := 0.7854 \cdot \left(d_{b3} - \frac{1.2269}{N_3}\right)^2 = 0.129\, in^2$

Demand

Tension $\quad T_3 := \frac{R}{2 \cdot Bolts} \cdot \frac{43 \cdot in}{3.5 \cdot in} = 1229\, lbf$

Shear $\quad V_3 := \frac{R}{2} = 100\, lbf$

Capacity

Tension Capacity $\quad T_{n3} := F_{nt3} \cdot A_{S3} = 3193 \cdot lbf$

Shear Capacity $\quad V_{n3} := F_{nv3} \cdot A_{R3} = 1679\, lbf$

Pull-out Capacity

$TSA_{E3} := 0.0600 \cdot in^2$ $\quad TSA_{I3} := 0.0860 \cdot in^2$

Internal Thread Capacity $\quad$ Conditions = "Thick"

$$T_{I3} := \frac{LE_3 \cdot N_3 \cdot TSA_{I3} \cdot F_{us3}}{SF_3 \cdot \sqrt{3}} = 5616\, lbf$$

External Thread Capacity

$$T_{E3} := \min\left(\frac{LE_3 \cdot N_3 \cdot TSA_{E3} \cdot F_{u3}}{SF_3 \cdot \sqrt{3}}, \frac{0.75 \cdot LE_3 \cdot N_3 \cdot TSA_{E3} \cdot F_{y3}}{\sqrt{3}}\right) = 3800\, lbf$$

Pull-out Capacity $\quad T_{outn3} := \min(T_{I3}, T_{E3}) = 3800 \cdot lbf$

Interaction

$IR1_3 := \left(\frac{T_3}{T_{n3}}\right)^2 + \left(\frac{V_3}{V_{n3}}\right)^2 = 0.15$ $\quad IR2_3 := \left(\frac{T_3}{T_{outn3}}\right)^2 = 0.1$

CheckASD3 = "OK"

© 2019 R&B Wagner, Inc. All Rights Reserved.
WagnerArchitectural.com

#3 Check Anchor Capacity

Hilti HUS-HR M10, SS Anchor

Demand

Anchor Group LRFD Moment $M_3 := 1.6 \cdot R \cdot 43 \cdot in = 13.76\ in \cdot kip$

Anchor Group LRFD Shear $V_3 := 1.6 \cdot R = 320\ lbf$

Anchor Capacity

Design Criteria:

- Concrete Strength f'c = 4000 psi min. @ 28 days
- Normal Weight Concrete
- 6" Slab Thickness
- 4" Min. Anchor Edge Distance (after installation tolerances)
- 3.563" Min. Embedment

Capacity is per the attached Hilti software output

© 2019 R&B Wagner, Inc. All Rights Reserved.
WagnerArchitectural.com

www.hilti.us

Profis Anchor 2.8.1

Company:	Stutzki Engineering, Inc.	Page:	1
Specifier:	JC	Project:	2018-208
Address:	241 N Broadway, Suite 302, Milwaukee, WI, 53202	Sub-Project I Pos. No.:	Legato Surface Bracket
Phone I Fax:	414-455-4815 |	Date:	5/22/2019
E-Mail:			

Specifier's comments:

1 Input data

Anchor type and diameter:	**HUS-HR M10x130**
Effective embedment depth:	$h_{ef,act}$ = 2.800 in., h_{nom} = 3.563 in.
Material:	A4
Evaluation Service Report:	Hilti Technical Data
Issued I Valid:	- | -
Proof:	Design method ACI 318-14 / Mech.
Stand-off installation:	e_b = 0.000 in. (no stand-off); t = 0.500 in.
Anchor plate:	l_x x l_y x t = 5.000 in. x 5.000 in. x 0.500 in.; (Recommended plate thickness: not calculated
Profile:	no profile
Base material:	cracked concrete, 4000, f_c' = 4,000 psi; h = 6.000 in.
Installation:	**hammer drilled hole, Installation condition: Dry**
Reinforcement:	tension: condition B, shear: condition B; no supplemental splitting reinforcement present
	edge reinforcement: none or < No. 4 bar

[R] - The anchor calculation is based on a rigid anchor plate assumption.

Geometry [in.] & Loading [lb, in.lb]

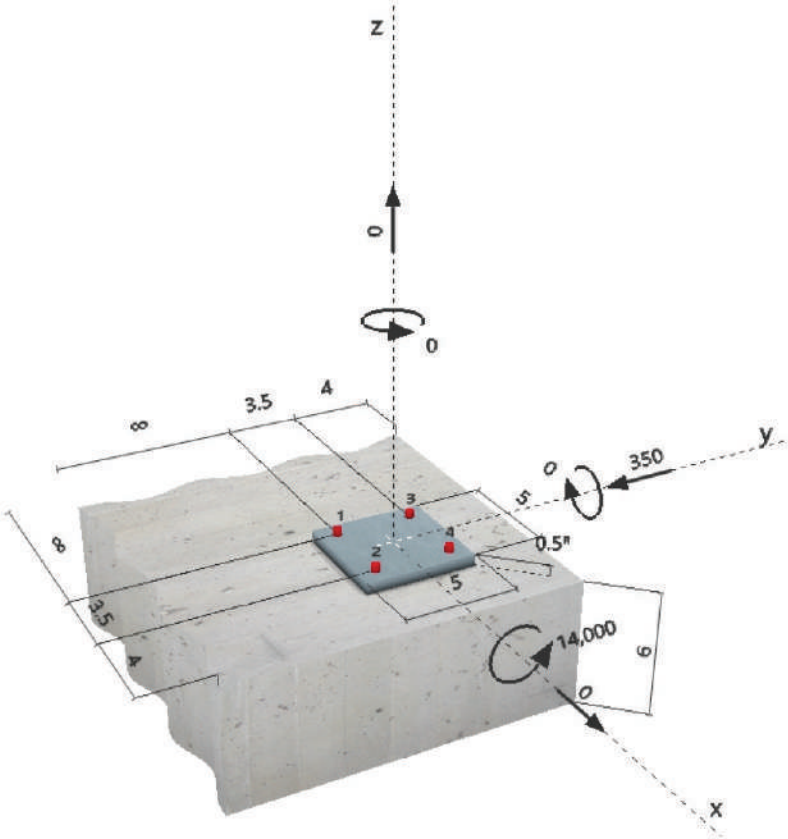

www.hilti.us

Profis Anchor 2.8.1

Company:	Stutzki Engineering, Inc.	Page:	2
Specifier:	JC	Project:	2018-208
Address:	241 N Broadway, Suite 302, Milwaukee, WI, 53202	Sub-Project I Pos. No.:	Legato Surface Bracket
Phone I Fax:	414-455-4815 |	Date:	5/22/2019
E-Mail:			

2 Load case/Resulting anchor forces

Load case: Design loads

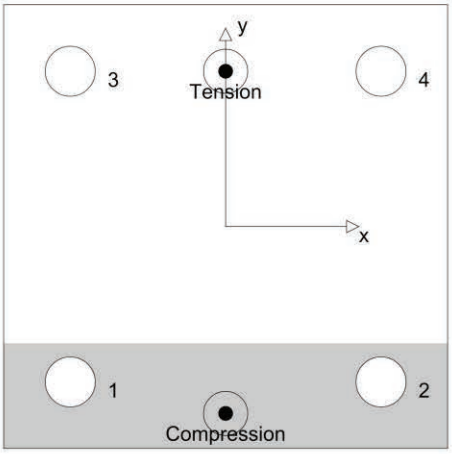

Anchor reactions [lb]
Tension force: (+Tension, -Compression)

Anchor	Tension force	Shear force	Shear force x	Shear force y
1	0	87	0	-87
2	0	87	0	-87
3	1,816	87	0	-87
4	1,816	87	0	-87

max. concrete compressive strain: 0.28 [‰]
max. concrete compressive stress: 1,225 [psi]
resulting tension force in (x/y)=(0.000/1.750): 3,632 [lb]
resulting compression force in (x/y)=(0.000/-2.105): 3,632 [lb]

Anchor forces are calculated based on the assumption of a rigid anchor plate.

3 Tension load

	Load N_{ua} [lb]	Capacity ϕN_n [lb]	Utilization $\beta_N = N_{ua}/\phi N_n$	Status
Steel Strength*	1,816	7,689	24	OK
Pullout Strength*	N/A	N/A	N/A	N/A
Concrete Breakout Strength**	3,632	3,713	98	OK

* anchor having the highest loading **anchor group (anchors in tension)

3.1 Steel Strength

N_{sa} = Value refer to Hilti Technical Data
$\phi N_{sa} \geq N_{ua}$ ACI 318-14 Table 17.3.1.1

Variables

$A_{se,N}$ [in.^{2}]	f_{uta} [psi]
0.09	137,750

Calculations

N_{sa} [lb]
11,830

Results

N_{sa} [lb]	ϕ_{steel}	ϕN_{sa} [lb]	N_{ua} [lb]
11,830	0.650	7,689	1,816

© 2019 R&B Wagner, Inc. All Rights Reserved.
WagnerArchitectural.com

www.hilti.us

Profis Anchor 2.8.1

Company:	Stutzki Engineering, Inc.	Page:	3
Specifier:	JC	Project:	2018-208
Address:	241 N Broadway, Suite 302, Milwaukee, WI, 53202	Sub-Project I Pos. No.:	Legato Surface Bracket
Phone I Fax:	414-455-4815 |	Date:	5/22/2019
E-Mail:			

3.2 Concrete Breakout Strength

$N_{cbg} = \left(\frac{A_{Nc}}{A_{Nc0}}\right) \psi_{ec,N}\, \psi_{ed,N}\, \psi_{c,N}\, \psi_{cp,N}\, N_b$ — ACI 318-14 Eq. (17.4.2.1b)

$\phi\ N_{cbg} \geq N_{ua}$ — ACI 318-14 Table 17.3.1.1

A_{Nc} see ACI 318-14, Section 17.4.2.1, Fig. R 17.4.2.1(b)

$A_{Nc0} = 9\, h_{ef}^2$ — ACI 318-14 Eq. (17.4.2.1c)

$\psi_{ec,N} = \left(\frac{1}{1 + \frac{2\, e'_N}{3\, h_{ef}}}\right) \leq 1.0$ — ACI 318-14 Eq. (17.4.2.4)

$\psi_{ed,N} = 0.7 + 0.3 \left(\frac{c_{a,min}}{1.5 h_{ef}}\right) \leq 1.0$ — ACI 318-14 Eq. (17.4.2.5b)

$\psi_{cp,N} = \text{MAX}\left(\frac{c_{a,min}}{c_{ac}}, \frac{1.5 h_{ef}}{c_{ac}}\right) \leq 1.0$ — ACI 318-14 Eq. (17.4.2.7b)

$N_b = k_c\, \lambda_a \sqrt{f'_c}\, h_{ef}^{1.5}$ — ACI 318-14 Eq. (17.4.2.2a)

Variables

h_{ef} [in.]	$e_{c1,N}$ [in.]	$e_{c2,N}$ [in.]	$c_{a,min}$ [in.]	$\psi_{c,N}$
2.800	0.000	0.000	4.000	1.000

c_{ac} [in.]	k_c	λ_a	f'_c [psi]
5.030	17	1.000	4,000

Calculations

A_{Nc} [in.^{2}]	A_{Nc0} [in.^{2}]	$\psi_{ec1,N}$	$\psi_{ec2,N}$	$\psi_{ed,N}$	$\psi_{cp,N}$	N_b [lb]
95.94	70.56	1.000	1.000	0.986	1.000	5,038

Results

N_{cbg} [lb]	$\phi_{concrete}$	$\phi\ N_{cbg}$ [lb]	N_{ua} [lb]
6,752	0.550	3,713	3,632

© 2019 R&B Wagner, Inc. All Rights Reserved.
WagnerArchitectural.com

4 Shear load

	Load V_{ua} [lb]	Capacity ϕV_n [lb]	Utilization $\beta_V = V_{ua}/\phi V_n$	Status
Steel Strength*	87	2,982	3	OK
Steel failure (with lever arm)*	N/A	N/A	N/A	N/A
Pryout Strength**	350	13,487	3	OK
Concrete edge failure in direction x+**	350	5,182	7	OK

* anchor having the highest loading **anchor group (relevant anchors)

4.1 Steel Strength

V_{sa} = Value refer to Hilti Technical Data

$\phi\ V_{steel} \geq V_{ua}$ ACI 318-14 Table 17.3.1.1

Variables

$A_{se,V}$ [in.^{2}]	f_{uta} [psi]
0.09	137,750

Calculations

V_{sa} [lb]
4,970

Results

V_{sa} [lb]	ϕ_{steel}	$\phi\ V_{sa}$ [lb]	V_{ua} [lb]
4,970	0.600	2,982	87

4.2 Pryout Strength

$V_{cpg} = k_{cp}\left[\left(\frac{A_{Nc}}{A_{Nc0}}\right)\psi_{ec,N}\,\psi_{ed,N}\,\psi_{c,N}\,\psi_{cp,N}\,N_b\right]$ ACI 318-14 Eq. (17.5.3.1b)

$\phi\ V_{cpg} \geq V_{ua}$ ACI 318-14 Table 17.3.1.1

A_{Nc} see ACI 318-14, Section 17.4.2.1, Fig. R 17.4.2.1(b)

$A_{Nc0} = 9\,h_{ef}^2$ ACI 318-14 Eq. (17.4.2.1c)

$\psi_{ec,N} = \left(\frac{1}{1+\frac{2\,e_N'}{3\,h_{ef}}}\right) \leq 1.0$ ACI 318-14 Eq. (17.4.2.4)

$\psi_{ed,N} = 0.7 + 0.3\left(\frac{c_{a,min}}{1.5h_{ef}}\right) \leq 1.0$ ACI 318-14 Eq. (17.4.2.5b)

$\psi_{cp,N} = \mathrm{MAX}\left(\frac{c_{a,min}}{c_{ac}}, \frac{1.5h_{ef}}{c_{ac}}\right) \leq 1.0$ ACI 318-14 Eq. (17.4.2.7b)

$N_b = k_c\,\lambda_a\,\sqrt{f_c'}\,h_{ef}^{1.5}$ ACI 318-14 Eq. (17.4.2.2a)

Variables

k_{cp}	h_{ef} [in.]	$e_{c1,N}$ [in.]	$e_{c2,N}$ [in.]	$c_{a,min}$ [in.]
2	2.800	0.000	0.000	4.000

$\psi_{c,N}$	c_{ac} [in.]	k_c	λ_a	f_c' [psi]
1.000	5.030	17	1.000	4,000

Calculations

A_{Nc} [in.^{2}]	A_{Nc0} [in.^{2}]	$\psi_{ec1,N}$	$\psi_{ec2,N}$	$\psi_{ed,N}$	$\psi_{cp,N}$	N_b [lb]
136.89	70.56	1.000	1.000	0.986	1.000	5,038

Results

V_{cpg} [lb]	$\phi_{concrete}$	$\phi\ V_{cpg}$ [lb]	V_{ua} [lb]
19,267	0.700	13,487	350

4.3 Concrete edge failure in direction x+

$V_{cbg} = \left(\frac{A_{Vc}}{A_{Vc0}}\right) \psi_{ec,V}\, \psi_{ed,V}\, \psi_{c,V}\, \psi_{h,V}\, \psi_{parallel,V}\, V_b$ — ACI 318-14 Eq. (17.5.2.1b)

$\phi\ V_{cbg} \geq V_{ua}$ — ACI 318-14 Table 17.3.1.1

A_{Vc} see ACI 318-14, Section 17.5.2.1, Fig. R 17.5.2.1(b)

$A_{Vc0} = 4.5\, c_{a1}^2$ — ACI 318-14 Eq. (17.5.2.1c)

$\psi_{ec,V} = \left(\frac{1}{1 + \frac{2e_v'}{3c_{a1}}}\right) \leq 1.0$ — ACI 318-14 Eq. (17.5.2.5)

$\psi_{ed,V} = 0.7 + 0.3\left(\frac{c_{a2}}{1.5c_{a1}}\right) \leq 1.0$ — ACI 318-14 Eq. (17.5.2.6b)

$\psi_{h,V} = \sqrt{\frac{1.5c_{a1}}{h_a}} \geq 1.0$ — ACI 318-14 Eq. (17.5.2.8)

$V_b = \left(7\left(\frac{l_e}{d_a}\right)^{0.2} \sqrt{d_a}\right) \lambda_a \sqrt{f_c'}\, c_{a1}^{1.5}$ — ACI 318-14 Eq. (17.5.2.2a)

Variables

c_{a1} [in.]	c_{a2} [in.]	e_{cV} [in.]	$\psi_{c,V}$	h_a [in.]
4.000	4.000	0.000	1.000	6.000

l_e [in.]	λ_a	d_a [in.]	f_c' [psi]	$\psi_{parallel,V}$
2.800	1.000	0.394	4,000	2.000

Calculations

A_{Vc} [in.^{2}]	A_{Vc0} [in.^{2}]	$\psi_{ec,V}$	$\psi_{ed,V}$	$\psi_{h,V}$	V_b [lb]
81.00	72.00	1.000	1.000	1.000	3,290

Results

V_{cbg} [lb]	$\phi_{concrete}$	$\phi\ V_{cbg}$ [lb]	V_{ua} [lb]
7,403	0.700	5,182	350

5 Combined tension and shear loads

β_N	β_V	ζ	Utilization $\beta_{N,V}$ [%]	Status
0.978	0.068	1.000	88	OK

$\beta_{NV} = (\beta_N + \beta_V) / 1.2 <= 1$

6 Warnings

- The anchor design methods in PROFIS Anchor require rigid anchor plates per current regulations (ETAG 001/Annex C, EOTA TR029, etc.). This means load re-distribution on the anchors due to elastic deformations of the anchor plate are not considered - the anchor plate is assumed to be sufficiently stiff, in order not to be deformed when subjected to the design loading. PROFIS Anchor calculates the minimum required anchor plate thickness with FEM to limit the stress of the anchor plate based on the assumptions explained above. The proof if the rigid anchor plate assumption is valid is not carried out by PROFIS Anchor. Input data and results must be checked for agreement with the existing conditions and for plausibility!
- Condition A applies when supplementary reinforcement is used. The Φ factor is increased for non-steel Design Strengths except Pullout Strength and Pryout strength. Condition B applies when supplementary reinforcement is not used and for Pullout Strength and Pryout Strength. Refer to your local standard.
- Refer to the manufacturer's product literature for cleaning and installation instructions.
- Checking the transfer of loads into the base material and the shear resistance are required in accordance with ACI 318 or the relevant standard!
- Hilti post-installed anchors shall be installed in accordance with the Hilti Manufacturer's Printed Installation Instructions (MPII). Reference ACI 318-14, Section 17.8.1.

Fastening meets the design criteria!

5.4. Facia Mounted Bracket Design

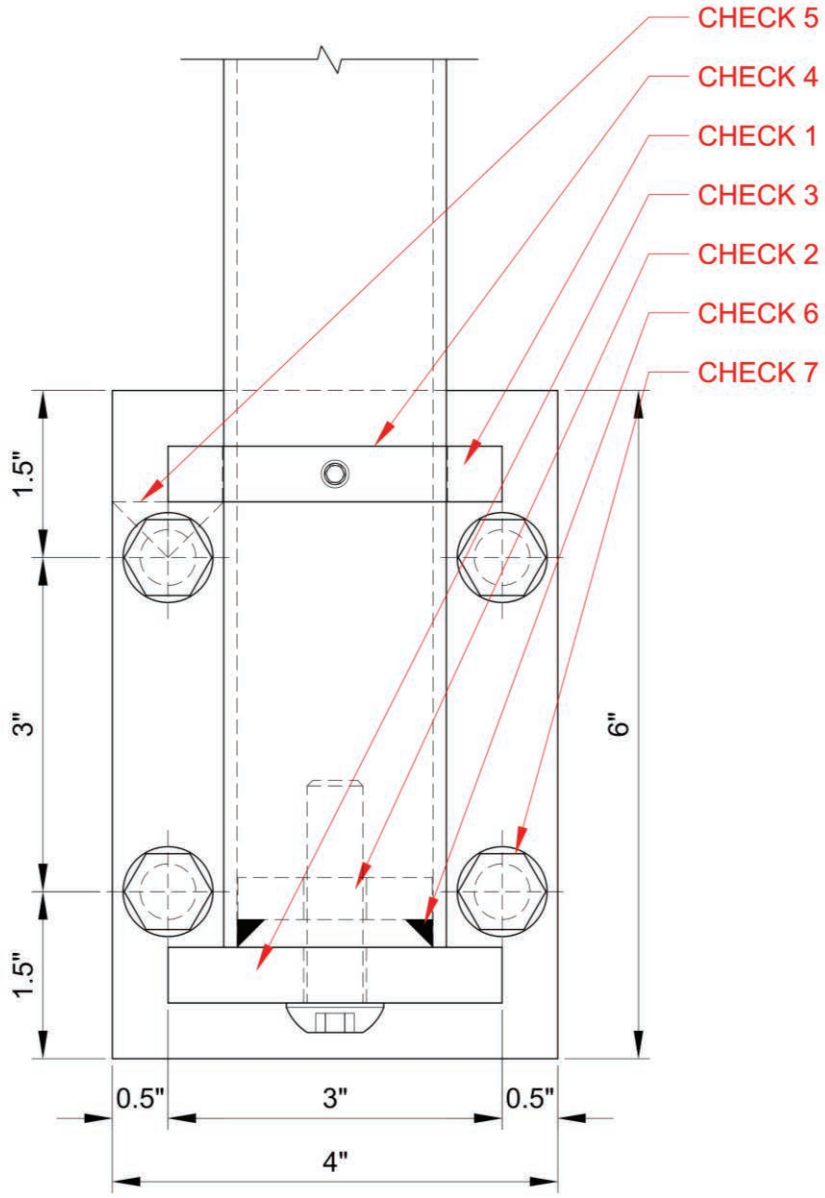

Connection Detail

© 2019 R&B Wagner, Inc. All Rights Reserved.
WagnerArchitectural.com

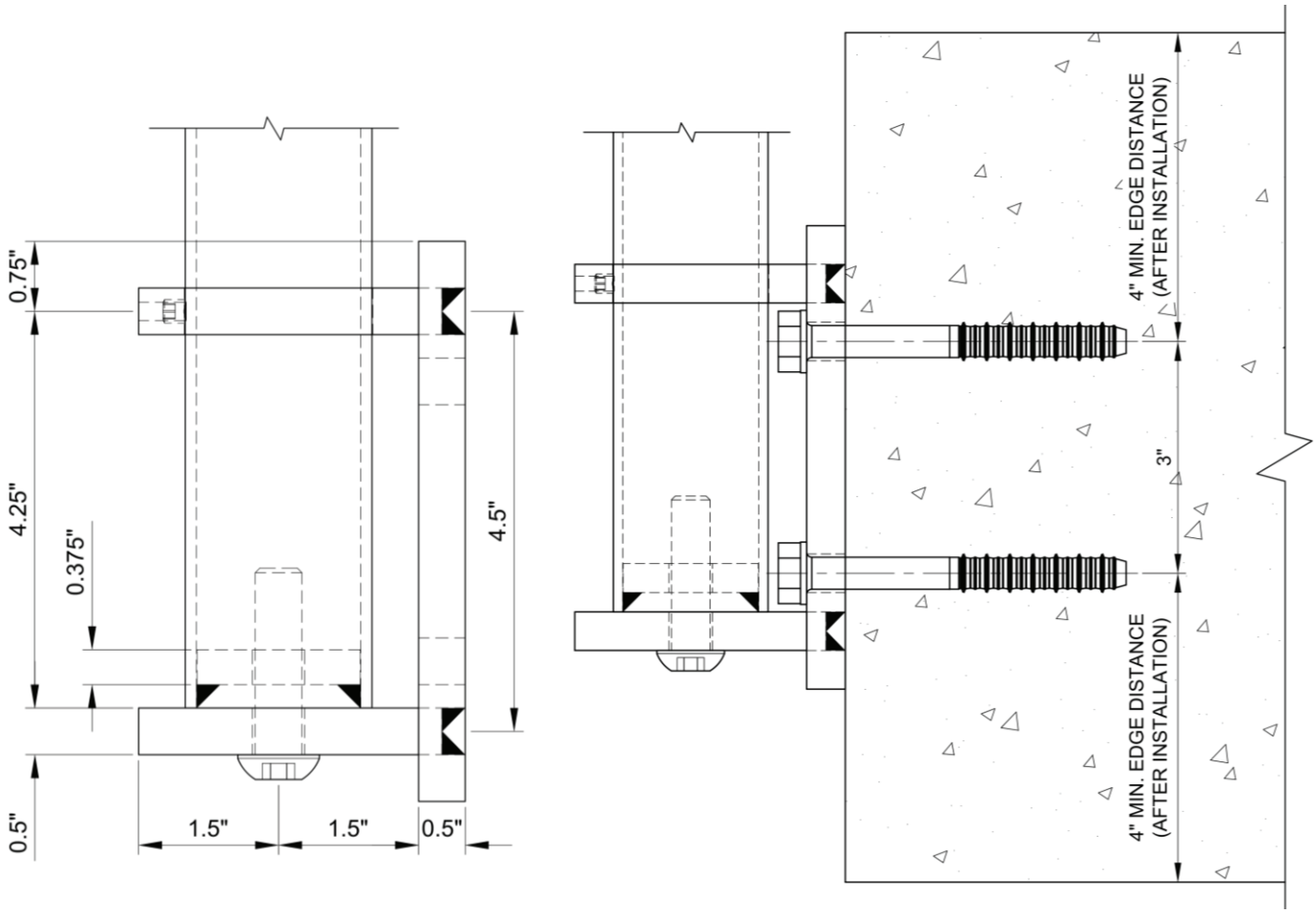

Connection Section View

© 2019 R&B Wagner, Inc. All Rights Reserved.
WagnerArchitectural.com

Loads (ASD)

$DL := 200 \cdot lbf$ $\qquad R := 200 \cdot lbf$

#1 Check Plate for Tension

3" x 3" x 1/2" Plate, 316 Stainless Steel

Properties:

$t_1 := 0.50 \cdot in$ $\qquad b_1 := 0.49 \cdot in$ $\qquad F_{y1} := 30 \cdot ksi$

$A_{g1} := t_1 \cdot b_1 = 0.25\,in^2$ $\qquad A_{n1} := t_1 \cdot b_1 = 0.25\,in^2$ $\qquad F_{u1} := 70 \cdot ksi$

Force

Tension in Plate Leg $\qquad T_1 := \left(\frac{R}{2 \cdot Legs} \cdot \frac{50.5 \cdot in}{4.25 \cdot in}\right) = 1.19 \cdot kip$

Capacity

Tensile Yielding $\qquad \Omega_1 := 1.67 \qquad T_{n1} := \frac{F_{y1} \cdot A_{g1}}{\Omega_1} = 4.4 \cdot kip$

Interaction

$IR1_1 := \frac{T_1}{T_{n1}} = 0.27$

CheckASD1 = "OK"

#2 Check Bolt Capacity

1/2"-13 Bolts, 316 Stainless Steel, Condition CW

Properties:

$d_{b2} := 0.500 \cdot in$ $\qquad F_{y2} := 65 \cdot ksi$ $\qquad F_{u2} := 100ksi$ $\qquad N_2 := 13 \cdot \frac{1}{in}$

$F_{nt2} := \min\left(0.75 \cdot F_{y2}, \frac{1}{SF_2} \cdot F_{u2}\right) = 40 \cdot ksi$ $\qquad F_{nv2} := \min\left(0.75 \cdot F_{y2} \div \sqrt{3}, \frac{1}{SF_2} \cdot F_{u2} \div \sqrt{3}\right) = 23.09 \cdot ksi$

$A_{S2} := 0.7854 \cdot \left(d_{b2} - \frac{0.9743}{N_2}\right)^2 = 0.142\,in^2$ $\qquad A_{R2} := 0.7854 \cdot \left(d_{b2} - \frac{1.2269}{N_2}\right)^2 = 0.129\,in^2$

Demand

Tension $\qquad T_2 := 0.0 \cdot lbf$

Shear $\qquad V_2 := R \cdot \frac{46.25 \cdot in}{4.25 \cdot in} = 2.18 \cdot kip$

Capacity

Tension Capacity $\qquad T_{n2} := F_{nt2} \cdot A_{S2} = 5676 \cdot lbf$

Shear Capacity $\qquad V_{n2} := F_{nv2} \cdot A_{R2} = 2984\,lbf$

Interaction

$IR1_2 := \left(\frac{T_2}{T_{n2}}\right)^2 + \left(\frac{V_2}{V_{n2}}\right)^2 = 0.53$

CheckASD2 = "OK"

© 2019 R&B Wagner, Inc. All Rights Reserved.
WagnerArchitectural.com

#3 Check Plate for Bending

3" x 3" x 1/2" Plate, 316 Stainless Steel

Properties:

$t_3 := 0.50 \cdot in$ $\quad b_3 := 3.0 \cdot in$ $\quad F_{y3} := 30 \cdot ksi$

$Z_{w3} := 0.25 \cdot b_3 \cdot t_3^2 = 0.19\,in^3$ $\quad A_{g3} := t_3 \cdot b_3 = 1.5\,in^2$

Force

Tension $\quad T_3 := \left(R \cdot \frac{46.25 \cdot in}{4.25 \cdot in}\right) = 2.18 \cdot kip$

Weak Axis Moment $\quad M_3 := \left(R \cdot \frac{46.25 \cdot in}{4.25 \cdot in}\right) \cdot 0.25 \cdot in + DL \cdot 1.75 \cdot in = 0.89 \cdot kip \cdot in$

Capacity

$\Omega_3 := 1.67$

Tension $\quad T_{n3} := \frac{F_{y3} \cdot A_{g3}}{\Omega_3} = 26.95 \cdot kip$

Weak Axis Moment $\quad M_{n3} := \frac{F_{y3} \cdot Z_{w3}}{\Omega_3} = 3.37\,in \cdot kip$

Interaction

$$IR1_3 := \frac{T_3}{T_{n3}} + \frac{M_3}{M_{n3}} = 0.35$$

$\boxed{CheckASD3 = \text{"OK"}}$

© 2019 R&B Wagner, Inc. All Rights Reserved.
WagnerArchitectural.com

#4 Check 4-Sided Weld

1/4" Fillet Weld, 70ksi Min. Filler Strength, All-Around

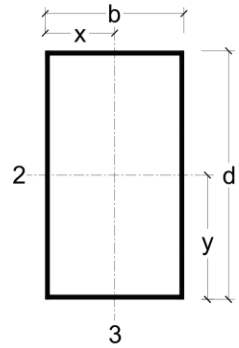

Input

$d_4 := 0.5 \cdot in$ $\qquad$ $b_4 := 3.0 \cdot in$

$y_4 := \frac{d_4}{2} = 0.25\,in$ $\qquad$ $x_4 := \frac{b_4}{2} = 1.5\,in$

Properties

$L_{4w} := 2 \cdot d_4 + 2 \cdot b_4 = 7\,in$

$S_{4w2} := \frac{d_4}{3} \cdot (3 \cdot b_4 + d_4) = 1.58\,in^2$

$S_{4w3} := \frac{b_4}{3} \cdot (3 \cdot d_4 + b_4) = 4.5\,in^2$

$J_{4w} := \frac{(b_4 + d_4)^3}{6} = 7.1\,in^3$

Forces

$N_4 := R \cdot \frac{46.25 \cdot in}{4.25 \cdot in} = 2.18 \cdot kip$ $\qquad$ $V_{4.2} := 0.0 \cdot lbf$ $\qquad$ $V_{4.3} := DL = 200\,lbf$

$T_4 := 0 \cdot kip \cdot in$ $\qquad$ $M_{4.2} := \left(R \cdot \frac{46.25 \cdot in}{4.25 \cdot in}\right) \cdot 0.25 \cdot in + DL \cdot 1.75 \cdot in$ $\qquad$ $M_{4.3} := 0 \cdot kip \cdot in$

Weld Stress

Normal Stress $\qquad$ $F_{wN} := \frac{N_4}{L_{4w}} + \frac{M_{4.2}}{S_{4w2}} + \frac{M_{4.3}}{S_{4w3}} = 0.88 \cdot \frac{kip}{in}$

Shear Stress $\qquad$ $F_{wV} := \sqrt{\left(\frac{V_{4.3}}{L_{4w}} + \frac{T_4 \cdot x_4}{J_{4w}}\right)^2 + \left(\frac{V_{4.2}}{L_{4w}} + \frac{T_4 \cdot y_4}{J_{4w}}\right)^2} = 0.03 \cdot \frac{kip}{in}$

Total Stress $\qquad$ $F_{w4} := \sqrt{F_{wN}^2 + F_{wV}^2}$ $\qquad$ $\boxed{F_{w4} = 0.88 \cdot \frac{kip}{in}}$

Capacity

Weld filler metal tensile strength $\qquad$ $F_{E4} := 70 \cdot ksi$

Effective Weld Throat $\qquad$ $E4 := \frac{\sqrt{2}}{2} \cdot \left(\frac{4}{16}\right) in = 0.18 \cdot in$ $\qquad$ $\Omega_4 := 2.7$

Allowable Stress $\qquad$ $f_{w4} := 0.6 \cdot F_{E4} \cdot E4 = 7.42 \cdot \frac{kip}{in}$ $\qquad$ $\boxed{\frac{f_{w4}}{\Omega_4} = 2.75 \cdot \frac{kip}{in}}$

Interaction

$IR1_4 := F_{w4} \div \frac{f_{w4}}{\Omega_4} = 0.32$ $\qquad$ $\boxed{CheckASD4 = \text{"OK"}}$

© 2019 R&B Wagner, Inc. All Rights Reserved.
WagnerArchitectural.com

#5 Check Base Plate for Bending

6" x 4" x 1/2" Plate, 316 Stainless Steel

Properties:

$t_5 := 0.50 \cdot in$ $\quad b_5 := 1.0 \cdot in$ $\quad F_{y5} := 30 \cdot ksi$ $\quad Z_{w5} := 0.25 \cdot b_5 \cdot t_5^2 = 0.06\,in^3$

Force

Bolt Tension $\quad T_5 := \left(\frac{R}{2 \cdot Bolts} \cdot \frac{50 \cdot in}{3.0 \cdot in}\right) = 1.67 \cdot kip$

Weak Axis Moment $\quad M_5 := T_5 \cdot 0.5 \cdot in = 0.83 \cdot kip \cdot in$

Capacity

$\Omega_5 := 1.67$

Weak Axis Moment $\quad M_{n5} := \frac{F_{y5} \cdot Z_{w5}}{\Omega_5} = 1.12\,in \cdot kip$

Interaction

$IR1_5 := \frac{M_5}{M_{n5}} = 0.74$

CheckASD5 = "OK"

© 2019 R&B Wagner, Inc. All Rights Reserved.
WagnerArchitectural.com

#6 Check 4-Sided Weld

1/4" Fillet Weld, 70ksi Min. Filler Strength, All-Around

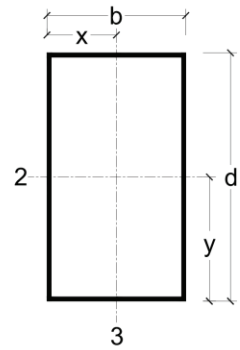

Input

$d_6 := 1.75 \cdot in$ $\qquad$ $b_6 := 1.75 \cdot in$

$y_6 := \frac{d_6}{2} = 0.88\,in$ $\qquad$ $x_6 := \frac{b_6}{2} = 0.88\,in$

Properties

$L_{6w} := 2 \cdot d_6 + 2 \cdot b_6 = 7\,in$

$S_{6w2} := \frac{d_6}{3} \cdot (3 \cdot b_6 + d_6) = 4.08\,in^2$

$S_{6w3} := \frac{b_6}{3} \cdot (3 \cdot d_6 + b_6) = 4.08\,in^2$

$J_{6w} := \frac{(b_6 + d_6)^3}{6} = 7.1\,in^3$

Forces

$N_6 := R \cdot \frac{45.25 \cdot in}{3.875 \cdot in} = 2.34 \cdot kip$ $\qquad$ $V_{6.2} := 0.0 \cdot lbf$ $\qquad$ $V_{6.3} := DL = 200\,lbf$

$T_6 := 0 \cdot kip \cdot in$ $\qquad$ $M_{6.2} := \left(R \cdot \frac{45.25 \cdot in}{3.875 \cdot in}\right) \cdot 0.625 \cdot in + DL \cdot 1.375 \cdot in$ $\qquad$ $M_{6.3} := 0 \cdot kip \cdot in$

Weld Stress

Normal Stress $\qquad$ $F_{wN} := \frac{N_6}{L_{6w}} + \frac{M_{6.2}}{S_{6w2}} + \frac{M_{6.3}}{S_{6w3}} = 0.76 \cdot \frac{kip}{in}$

Shear Stress $\qquad$ $F_{wV} := \sqrt{\left(\frac{V_{6.3}}{L_{6w}} + \frac{T_6 \cdot x_6}{J_{6w}}\right)^2 + \left(\frac{V_{6.2}}{L_{6w}} + \frac{T_6 \cdot y_6}{J_{6w}}\right)^2} = 0.03 \cdot \frac{kip}{in}$

Total Stress $\qquad$ $F_{w6} := \sqrt{F_{wN}^2 + F_{wV}^2}$ $\qquad$ $\boxed{F_{w6} = 0.76 \cdot \frac{kip}{in}}$

Capacity

Weld filler metal tensile strength $\qquad$ $F_{E6} := 70 \cdot ksi$

Effective Weld Throat $\qquad$ $E6 := \frac{\sqrt{2}}{2} \cdot \left(\frac{4}{16}\right) in = 0.18 \cdot in$ $\qquad$ $\Omega_6 := 2.7$

Allowable Stress $\qquad$ $f_{w6} := 0.6 \cdot F_{E6} \cdot E6 = 7.42 \cdot \frac{kip}{in}$ $\qquad$ $\boxed{\frac{f_{w6}}{\Omega_6} = 2.75 \cdot \frac{kip}{in}}$

Interaction

$IR1_6 := F_{w6} \div \frac{f_{w6}}{\Omega_6} = 0.28$ $\qquad$ $\boxed{CheckASD6 = \text{"OK"}}$

© 2019 R&B Wagner, Inc. All Rights Reserved.
WagnerArchitectural.com

#7 Check Bolt Capacity

(4) - 1/2"-13 Bolts, 316 Stainless Steel, Condition A

Properties:

$d_{b7} := 0.500 \cdot in$ $\quad F_{y7} := 30 \cdot ksi$ $\quad F_{u7} := 75ksi$ $\quad N_7 := 13 \cdot \frac{1}{in}$

$LE_7 := 0.375 \cdot in$ $\quad F_{us7} := 58ksi$ $\quad SF_7 = 2.5$

$F_{nt7} := \min\left(0.75 \cdot F_{y7}, \frac{1}{SF_7} \cdot F_{u7}\right) = 22.5 \cdot ksi$ $\quad F_{nv7} := \min\left(0.75 \cdot F_{y7} \div \sqrt{3}, \frac{1}{SF_7} \cdot F_{u7} \div \sqrt{3}\right) = 12.99 \cdot ksi$

$A_{S7} := 0.7854 \cdot \left(d_{b7} - \frac{0.9743}{N_7}\right)^2 = 0.142\, in^2$ $\quad A_{R7} := 0.7854 \cdot \left(d_{b7} - \frac{1.2269}{N_7}\right)^2 = 0.129\, in^2$

Demand

Tension $\quad T_7 := \frac{R}{2 \cdot Bolts} \cdot \frac{50 \cdot in}{3 \cdot in} = 1667\, lbf$

Shear $\quad V_7 := \frac{DL}{2 \cdot Bolts} = 100\, lbf$

Capacity

Tension Capacity $\quad T_{n7} := F_{nt7} \cdot A_{S7} = 3193 \cdot lbf$

Shear Capacity $\quad V_{n7} := F_{nv7} \cdot A_{R7} = 1679\, lbf$

Pull-out Capacity

$TSA_{E7} := 0.0600 \cdot in^2$ $\quad TSA_{I7} := 0.0860 \cdot in^2$

Internal Thread Capacity $\quad$ Conditions = "Thick"

$$T_{I7} := \frac{LE_7 \cdot N_7 \cdot TSA_{I7} \cdot F_{us7}}{SF_7 \cdot \sqrt{3}} = 5616\, lbf$$

External Thread Capacity

$$T_{E7} := \min\left(\frac{LE_7 \cdot N_7 \cdot TSA_{E7} \cdot F_{u7}}{SF_7 \cdot \sqrt{3}}, \frac{0.75 \cdot LE_7 \cdot N_7 \cdot TSA_{E7} \cdot F_{y7}}{\sqrt{3}}\right) = 3800\, lbf$$

Pull-out Capacity $\quad T_{outn7} := \min(T_{I7}, T_{E7}) = 3800 \cdot lbf$

Interaction

$$IR1_7 := \left(\frac{T_7}{T_{n7}}\right)^2 + \left(\frac{V_7}{V_{n7}}\right)^2 = 0.28 \qquad IR2_7 := \frac{T_7}{T_{outn7}} = 0.44$$

CheckASD7 = "OK"

© 2019 R&B Wagner, Inc. All Rights Reserved.
WagnerArchitectural.com

#7 Check Anchor Capacity

Hilti HUS-HR M10, SS Anchor

Demand

Anchor Group LRFD Moment $M_7 := 1.6 \cdot R \cdot 47.5 \cdot in = 15.2\, in \cdot kip$

Anchor Group LRFD Shear $V_7 := 1.6 \cdot DL = 320\, lbf$

Anchor Capacity

Design Criteria:

- Concrete Strength f'c = 4000 psi min. @ 28 days
- Normal Weight Concrete
- Uncracked Concrete Condition
- 6" Slab Thickness
- 4" Min. Anchor Edge Distance (after installation tolerances)
- 3.563" Min. Embedment

Capacity is per the attached Hilti software output

© 2019 R&B Wagner, Inc. All Rights Reserved.
WagnerArchitectural.com

www.hilti.us

Profis Anchor 2.8.1

Company:	Stutzki Engineering, Inc.	Page:	1
Specifier:	JC	Project:	2018-208
Address:	241 N Broadway, Suite 302, Milwaukee, WI, 53202	Sub-Project I Pos. No.:	Legato Facia Bracket
Phone I Fax:	414-455-4815 |	Date:	5/22/2019
E-Mail:			

Specifier's comments:

1 Input data

Anchor type and diameter:	**HUS-HR M10x130**
Effective embedment depth:	$h_{ef,act}$ = 2.800 in., h_{nom} = 3.563 in.
Material:	A4
Evaluation Service Report:	Hilti Technical Data
Issued I Valid:	- | -
Proof:	Design method ACI 318-14 / Mech.
Stand-off installation:	e_b = 0.000 in. (no stand-off); t = 0.500 in.
Anchor plate:	l_x x l_y x t = 4.000 in. x 6.000 in. x 0.500 in.; (Recommended plate thickness: not calculated
Profile:	no profile
Base material:	uncracked concrete, 4000, f_c' = 4,000 psi; h = 6.000 in.
Installation:	**hammer drilled hole, Installation condition: Dry**
Reinforcement:	tension: condition B, shear: condition B; no supplemental splitting reinforcement present edge reinforcement: none or < No. 4 bar

[R] - The anchor calculation is based on a rigid anchor plate assumption.

Geometry [in.] & Loading [lb, in.lb]

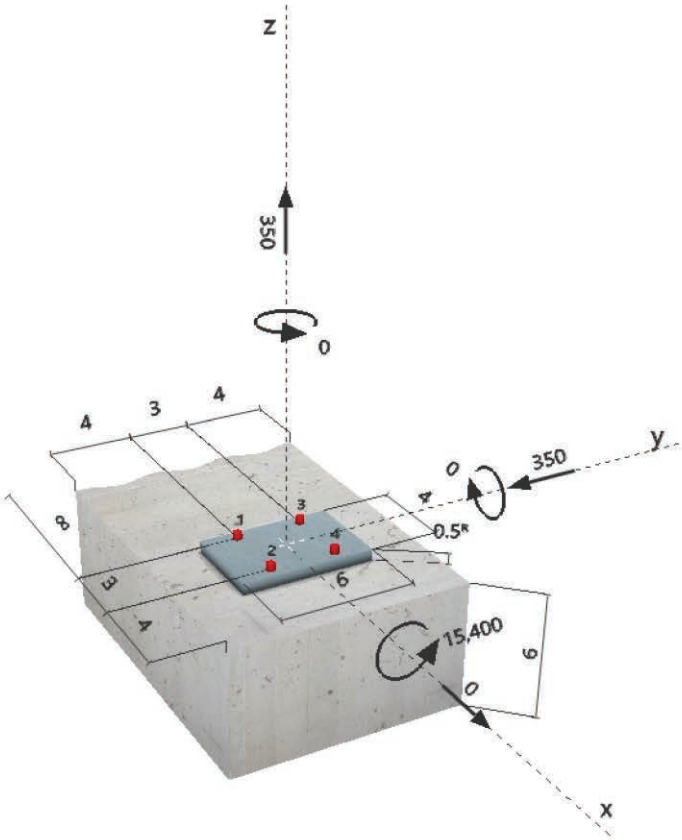

www.hilti.us

Profis Anchor 2.8.1

Company:	Stutzki Engineering, Inc.	Page:	2
Specifier:	JC	Project:	2018-208
Address:	241 N Broadway, Suite 302, Milwaukee, WI, 53202	Sub-Project I Pos. No.:	Legato Facia Bracket
Phone I Fax:	414-455-4815 |	Date:	5/22/2019
E-Mail:			

2 Load case/Resulting anchor forces

Load case: Design loads

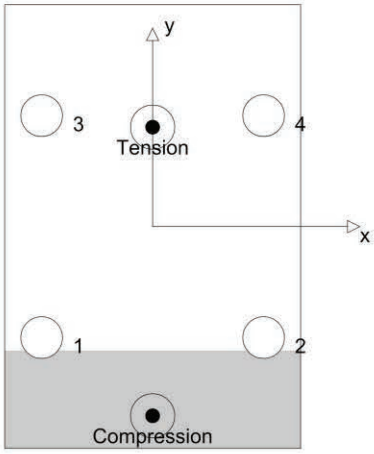

Anchor reactions [lb]
Tension force: (+Tension, -Compression)

Anchor	Tension force	Shear force	Shear force x	Shear force y
1	108	87	0	-87
2	108	87	0	-87
3	1,980	87	0	-87
4	1,980	87	0	-87

max. concrete compressive strain: 0.33 [‰]
max. concrete compressive stress: 1,443 [psi]
resulting tension force in (x/y)=(0.000/1.344): 4,176 [lb]
resulting compression force in (x/y)=(0.000/-2.558): 3,826 [lb]

Anchor forces are calculated based on the assumption of a rigid anchor plate.

3 Tension load

	Load N_{ua} [lb]	Capacity ϕN_n [lb]	Utilization $\beta_N = N_{ua}/\phi N_n$	Status
Steel Strength*	1,980	7,689	26	OK
Pullout Strength*	N/A	N/A	N/A	N/A
Concrete Breakout Strength**	4,176	4,296	98	OK

* anchor having the highest loading **anchor group (anchors in tension)

3.1 Steel Strength

N_{sa} = Value refer to Hilti Technical Data
$\phi N_{sa} \geq N_{ua}$ ACI 318-14 Table 17.3.1.1

Variables

$A_{se,N}$ [in.^{2}]	f_{uta} [psi]
0.09	137,750

Calculations

N_{sa} [lb]
11,830

Results

N_{sa} [lb]	ϕ_{steel}	ϕN_{sa} [lb]	N_{ua} [lb]
11,830	0.650	7,689	1,980

© 2019 R&B Wagner, Inc. All Rights Reserved.
WagnerArchitectural.com

www.hilti.us

Profis Anchor 2.8.1

Company:	Stutzki Engineering, Inc.	Page:	3
Specifier:	JC	Project:	2018-208
Address:	241 N Broadway, Suite 302, Milwaukee, WI, 53202	Sub-Project I Pos. No.:	Legato Facia Bracket
Phone I Fax:	414-455-4815 |	Date:	5/22/2019
E-Mail:			

3.2 Concrete Breakout Strength

$N_{cbg} = \left(\frac{A_{Nc}}{A_{Nc0}}\right) \psi_{ec,N}\, \psi_{ed,N}\, \psi_{c,N}\, \psi_{cp,N}\, N_b$ — ACI 318-14 Eq. (17.4.2.1b)

$\phi\ N_{cbg} \geq N_{ua}$ — ACI 318-14 Table 17.3.1.1

A_{Nc} see ACI 318-14, Section 17.4.2.1, Fig. R 17.4.2.1(b)

$A_{Nc0} = 9\, h_{ef}^2$ — ACI 318-14 Eq. (17.4.2.1c)

$\psi_{ec,N} = \left(\frac{1}{1 + \frac{2\, e'_N}{3\, h_{ef}}}\right) \leq 1.0$ — ACI 318-14 Eq. (17.4.2.4)

$\psi_{ed,N} = 0.7 + 0.3 \left(\frac{c_{a,min}}{1.5 h_{ef}}\right) \leq 1.0$ — ACI 318-14 Eq. (17.4.2.5b)

$\psi_{cp,N} = \text{MAX}\left(\frac{c_{a,min}}{c_{ac}}, \frac{1.5 h_{ef}}{c_{ac}}\right) \leq 1.0$ — ACI 318-14 Eq. (17.4.2.7b)

$N_b = k_c\, \lambda_a \sqrt{f'_c}\, h_{ef}^{1.5}$ — ACI 318-14 Eq. (17.4.2.2a)

Variables

h_{ef} [in.]	$e_{c1,N}$ [in.]	$e_{c2,N}$ [in.]	$c_{a,min}$ [in.]	$\psi_{c,N}$
2.667	0.000	1.344	4.000	1.000

c_{ac} [in.]	k_c	λ_a	f'_c [psi]
5.030	24	1.000	4,000

Calculations

A_{Nc} [in.^{2}]	A_{Nc0} [in.^{2}]	$\psi_{ec1,N}$	$\psi_{ec2,N}$	$\psi_{ed,N}$	$\psi_{cp,N}$	N_b [lb]
121.00	64.00	1.000	0.748	1.000	0.835	6,610

Results

N_{cbg} [lb]	$\phi_{concrete}$	$\phi\ N_{cbg}$ [lb]	N_{ua} [lb]
7,810	0.550	4,296	4,176

© 2019 R&B Wagner, Inc. All Rights Reserved.
WagnerArchitectural.com

4 Shear load

	Load V_{ua} [lb]	Capacity ϕV_n [lb]	Utilization $\beta_V = V_{ua}/\phi V_n$	Status
Steel Strength*	87	2,982	3	OK
Steel failure (with lever arm)*	N/A	N/A	N/A	N/A
Pryout Strength**	350	14,609	3	OK
Concrete edge failure in direction y-**	350	3,144	12	OK

* anchor having the highest loading **anchor group (relevant anchors)

4.1 Steel Strength

V_{sa} = Value — refer to Hilti Technical Data

$\phi\ V_{steel} \geq V_{ua}$ — ACI 318-14 Table 17.3.1.1

Variables

$A_{se,V}$ [in.^{2}]	f_{uta} [psi]
0.09	137,750

Calculations

V_{sa} [lb]
4,970

Results

V_{sa} [lb]	ϕ_{steel}	$\phi\ V_{sa}$ [lb]	V_{ua} [lb]
4,970	0.600	2,982	87

4.2 Pryout Strength

$V_{cpg} = k_{cp}\left[\left(\frac{A_{Nc}}{A_{Nc0}}\right)\psi_{ec,N}\,\psi_{ed,N}\,\psi_{c,N}\,\psi_{cp,N}\,N_b\right]$ — ACI 318-14 Eq. (17.5.3.1b)

$\phi\ V_{cpg} \geq V_{ua}$ — ACI 318-14 Table 17.3.1.1

A_{Nc} see ACI 318-14, Section 17.4.2.1, Fig. R 17.4.2.1(b)

$A_{Nc0} = 9\,h_{ef}^2$ — ACI 318-14 Eq. (17.4.2.1c)

$\psi_{ec,N} = \left(\frac{1}{1+\frac{2\,e_N'}{3\,h_{ef}}}\right) \leq 1.0$ — ACI 318-14 Eq. (17.4.2.4)

$\psi_{ed,N} = 0.7 + 0.3\left(\frac{c_{a,min}}{1.5h_{ef}}\right) \leq 1.0$ — ACI 318-14 Eq. (17.4.2.5b)

$\psi_{cp,N} = \mathrm{MAX}\left(\frac{c_{a,min}}{c_{ac}}, \frac{1.5h_{ef}}{c_{ac}}\right) \leq 1.0$ — ACI 318-14 Eq. (17.4.2.7b)

$N_b = k_c\,\lambda_a\,\sqrt{f_c'}\,h_{ef}^{1.5}$ — ACI 318-14 Eq. (17.4.2.2a)

Variables

k_{cp}	h_{ef} [in.]	$e_{c1,N}$ [in.]	$e_{c2,N}$ [in.]	$c_{a,min}$ [in.]
2	2.667	0.000	0.000	4.000

$\psi_{c,N}$	c_{ac} [in.]	k_c	λ_a	f_c' [psi]
1.000	5.030	24	1.000	4,000

Calculations

A_{Nc} [in.^{2}]	A_{Nc0} [in.^{2}]	$\psi_{ec1,N}$	$\psi_{ec2,N}$	$\psi_{ed,N}$	$\psi_{cp,N}$	N_b [lb]
121.00	64.00	1.000	1.000	1.000	0.835	6,610

Results

V_{cpg} [lb]	$\phi_{concrete}$	$\phi\ V_{cpg}$ [lb]	V_{ua} [lb]
20,869	0.700	14,609	350

4.3 Concrete edge failure in direction y-

$V_{cbg} = \left(\frac{A_{Vc}}{A_{Vc0}}\right) \psi_{ec,V}\, \psi_{ed,V}\, \psi_{c,V}\, \psi_{h,V}\, \psi_{parallel,V}\, V_b$ — ACI 318-14 Eq. (17.5.2.1b)

$\phi\ V_{cbg} \geq V_{ua}$ — ACI 318-14 Table 17.3.1.1

A_{Vc} see ACI 318-14, Section 17.5.2.1, Fig. R 17.5.2.1(b)

$A_{Vc0} = 4.5\, c_{a1}^2$ — ACI 318-14 Eq. (17.5.2.1c)

$\psi_{ec,V} = \left(\frac{1}{1 + \frac{2e_v'}{3c_{a1}}}\right) \leq 1.0$ — ACI 318-14 Eq. (17.5.2.5)

$\psi_{ed,V} = 0.7 + 0.3\left(\frac{c_{a2}}{1.5c_{a1}}\right) \leq 1.0$ — ACI 318-14 Eq. (17.5.2.6b)

$\psi_{h,V} = \sqrt{\frac{1.5c_{a1}}{h_a}} \geq 1.0$ — ACI 318-14 Eq. (17.5.2.8)

$V_b = \left(7\left(\frac{l_e}{d_a}\right)^{0.2} \sqrt{d_a}\right) \lambda_a \sqrt{f_c'}\, c_{a1}^{1.5}$ — ACI 318-14 Eq. (17.5.2.2a)

Variables

c_{a1} [in.]	c_{a2} [in.]	e_{cV} [in.]	$\psi_{c,V}$	h_a [in.]
4.000	4.000	0.000	1.400	6.000

l_e [in.]	λ_a	d_a [in.]	f_c' [psi]	$\psi_{parallel,V}$
2.800	1.000	0.394	4,000	1.000

Calculations

A_{Vc} [in.^{2}]	A_{Vc0} [in.^{2}]	$\psi_{ec,V}$	$\psi_{ed,V}$	$\psi_{h,V}$	V_b [lb]
78.00	72.00	1.000	0.900	1.000	3,290

Results

V_{cbg} [lb]	$\phi_{concrete}$	$\phi\ V_{cbg}$ [lb]	V_{ua} [lb]
4,491	0.700	3,144	350

5 Combined tension and shear loads

β_N	β_V	ζ	Utilization $\beta_{N,V}$ [%]	Status
0.972	0.111	1.000	91	OK

$\beta_{NV} = (\beta_N + \beta_V) / 1.2 <= 1$

6 Warnings

- The anchor design methods in PROFIS Anchor require rigid anchor plates per current regulations (ETAG 001/Annex C, EOTA TR029, etc.). This means load re-distribution on the anchors due to elastic deformations of the anchor plate are not considered - the anchor plate is assumed to be sufficiently stiff, in order not to be deformed when subjected to the design loading. PROFIS Anchor calculates the minimum required anchor plate thickness with FEM to limit the stress of the anchor plate based on the assumptions explained above. The proof if the rigid anchor plate assumption is valid is not carried out by PROFIS Anchor. Input data and results must be checked for agreement with the existing conditions and for plausibility!
- Condition A applies when supplementary reinforcement is used. The Φ factor is increased for non-steel Design Strengths except Pullout Strength and Pryout strength. Condition B applies when supplementary reinforcement is not used and for Pullout Strength and Pryout Strength. Refer to your local standard.
- Refer to the manufacturer's product literature for cleaning and installation instructions.
- Checking the transfer of loads into the base material and the shear resistance are required in accordance with ACI 318 or the relevant standard!
- Hilti post-installed anchors shall be installed in accordance with the Hilti Manufacturer's Printed Installation Instructions (MPII). Reference ACI 318-14, Section 17.8.1.

Fastening meets the design criteria!

6. Railing Connection Design

6.1. Design Criteria

6.1.1. Fasteners

A4-50 Bolts,	Fy = 210 MPa, min	Fu = 500 MPa, min

6.1.2. Stainless Steel

316 SS	Fy = 30 ksi, min	Fu = 70 ksi, min

6.2. Overall Geometry and Location

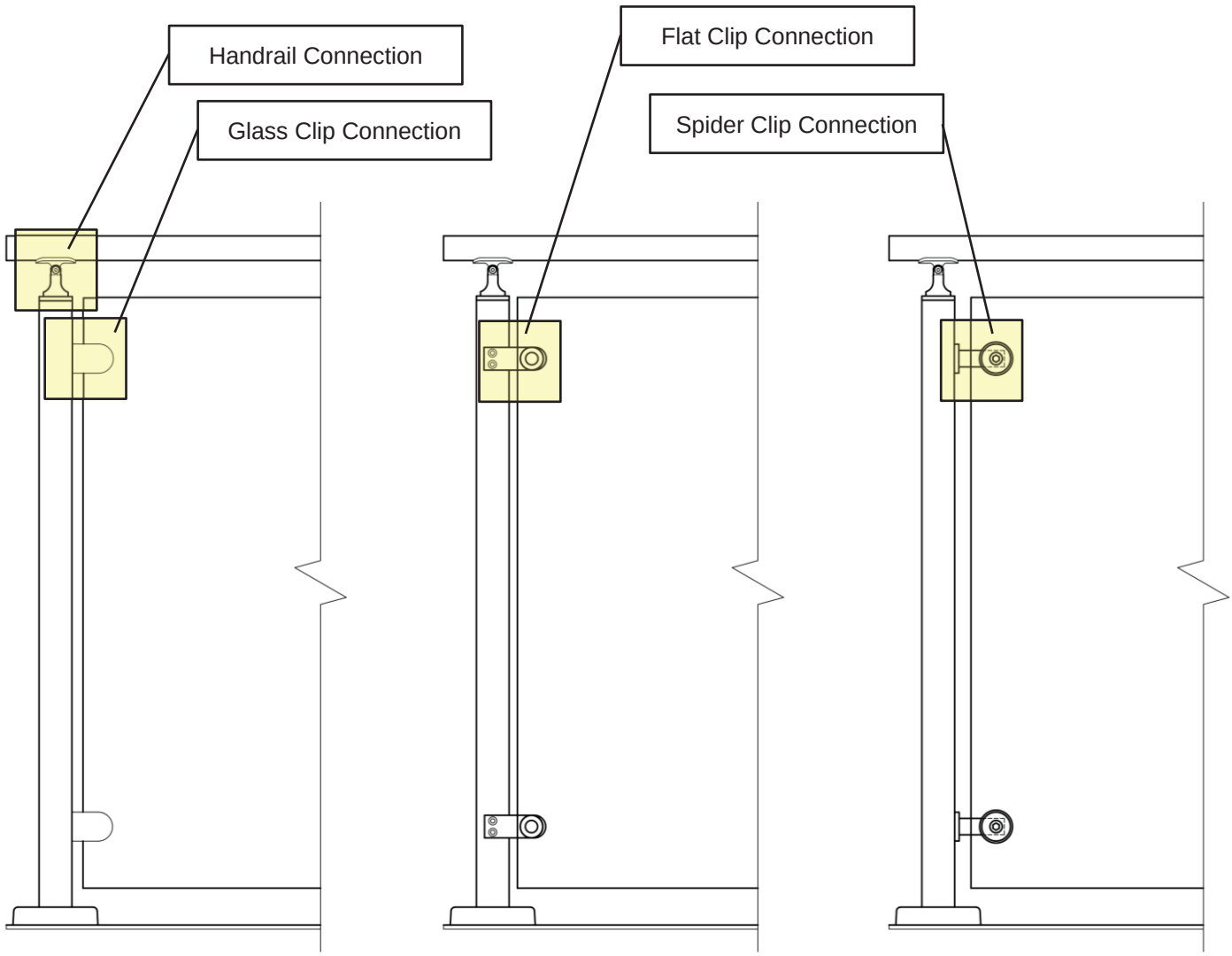

© 2019 R&B Wagner, Inc. All Rights Reserved.
WagnerArchitectural.com

6.3. Glass Clip

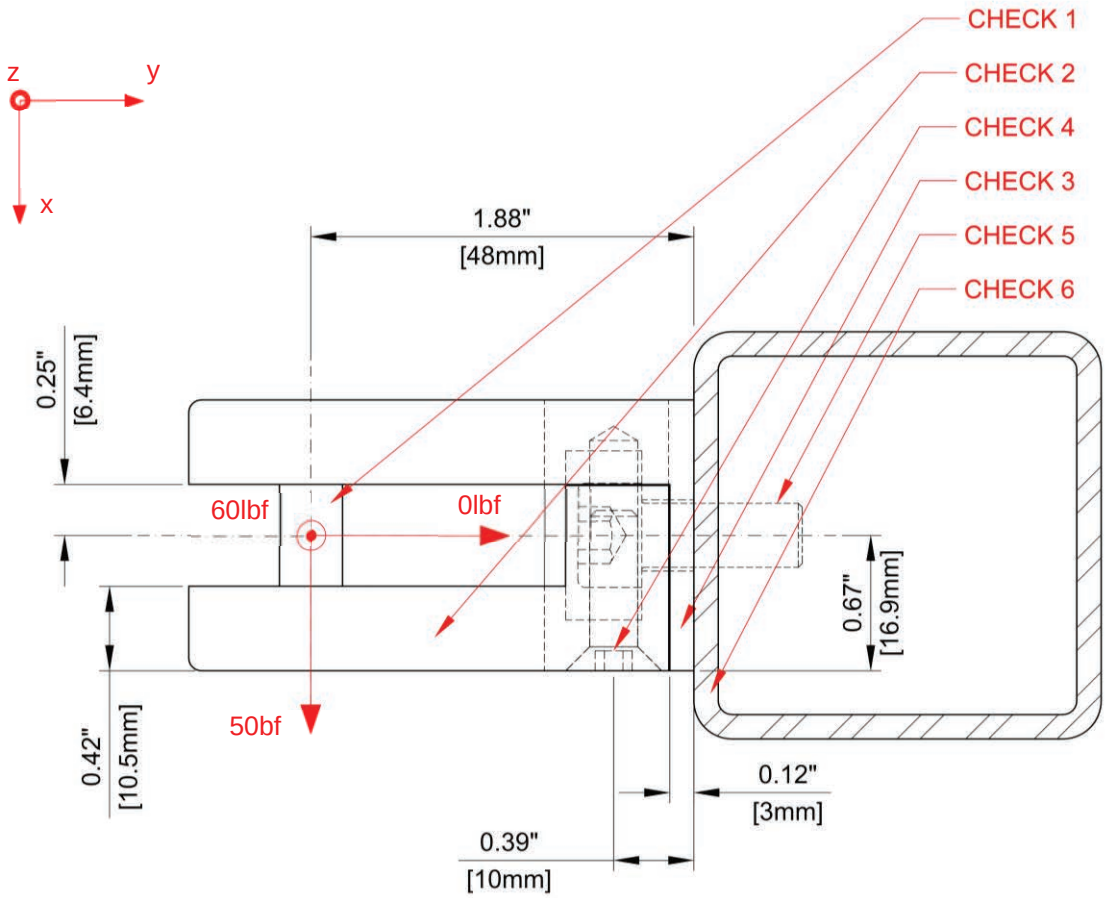

Connection Detail

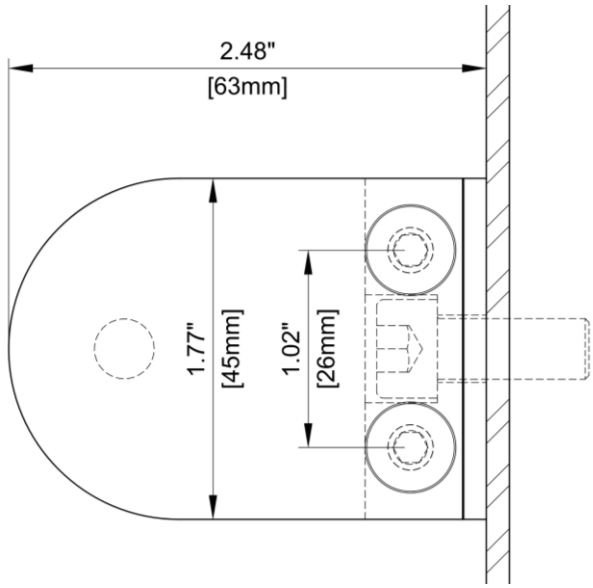

Connection Detail

© 2019 R&B Wagner, Inc. All Rights Reserved.
WagnerArchitectural.com

Loads (ASD)

$P_x := 50 \cdot lbf$ Infill Panel Load $M_x := 0.0 \cdot lbf \cdot in$

$P_y := 0 \cdot lbf$ $M_y := 0.0 \cdot lbf \cdot in$

$P_z := 60 \cdot lbf$ Glass Dead Load $M_z := 0.0 \cdot lbf \cdot in$

#1 Check Pin Capacity

3/8" Dia Pin, A4-50 Stainless Steel

Input

$d_1 := 0.375 \cdot in$ $A_{b1} := 0.25 \cdot \pi \cdot d_1^2 = 0.11\, in^2$ $F_{u1} := 500 \cdot MPa$

$F_{nt1} := 0.75 \cdot F_{u1} = 54.39 \cdot ksi$ $F_{nv1} := 0.563 \cdot F_{u1} = 40.83 \cdot ksi$

Forces

Shear $V_1 := P_z = 0.06 \cdot kip$

Tension $T_1 := 0.0 \cdot lbf = 0 \cdot kip$

Capacity $\Omega_1 := 2.00$

Shear $V_{n1} := \dfrac{F_{nv1} \cdot A_{b1}}{\Omega_1} = 2255\, lbf$

Tension $T_{n1} := \dfrac{F_{nt1} \cdot A_{b1}}{\Omega_1} = 3 \cdot kip$

Interaction

$$IR1_1 := \left(\frac{T_1}{T_{n1}}\right)^2 + \left(\frac{V_1}{V_{n1}}\right)^2 = 0$$

CheckASD1 = "OK"

© 2019 R&B Wagner, Inc. All Rights Reserved.
WagnerArchitectural.com

#2 Check Clip Plate Capacity

63mm x 45mm x 10.5mm Plate, 316 Stainless Steel

Properties:

$t_2 := 10.5 \cdot mm$ $\quad h_2 := 45 \cdot mm$ $\quad L_2 := 48 \cdot mm$

$F_{y2} := 30ksi$ $\quad F_{u2} := 70ksi$ $\quad E_2 := 29000ksi$

$Z_{s2} := 0.25 \cdot t_2 \cdot h_2^2 = 0.32 in^3$ $\quad Z_{w2} := 0.25 \cdot h_2 \cdot t_2^2 = 0.08 in^3$

$I_{w2} := \frac{h_2 \cdot t_2^3}{12} = 0.01 in^4$ $\quad S_{s2} := \frac{t_2 \cdot h_2^2}{6} = 0.22 in^3$

$r_2 := \sqrt{\frac{I_{w2}}{t_2 \cdot h_2}} = 0.12 in$ $\quad kLr_2 := \frac{2.0 \cdot L_2}{r_2}$

Force

Strong Axis Moment $\quad M_{s2} := P_z \cdot 48 \cdot mm = 0.11 \cdot in \cdot kip$

Weak Axis Moment $\quad M_{w2} := P_x \cdot 45 \cdot mm = 0.09 in \cdot kip$

Capacity

$\Omega_2 := 1.67$

Strong Axis Moment $\quad \frac{L_2 \cdot h_2}{t_2^2} = 19.59 \quad \boxed{<} \quad \frac{0.08 \cdot E_2}{F_{y2}} = 77$

$M_{ns2} := \frac{F_{y2} \cdot Z_{s2}}{\Omega_2} = 5.83 \cdot in \cdot kip$

Weak Axis Moment $\quad M_{nw2} := \frac{F_{y2} \cdot Z_{w2}}{\Omega_2} = 1.36 in \cdot kip$

Interaction

$IR1_2 := \frac{M_{w2}}{M_{nw2}} + \frac{M_{s2}}{M_{ns2}} = 0.08$

$\boxed{CheckASD2 = "OK"}$

© 2019 R&B Wagner, Inc. All Rights Reserved.
WagnerArchitectural.com

#3 Check Clip Plate for Local Bending

3mm Thick Clip Wall, 316 Stainless Steel

Properties:

$t_3 := 3.0 \cdot mm$ $\quad b_3 := 45 \cdot mm$ $\quad F_{y3} := 30 \cdot ksi$ $\quad Z_{w3} := 0.25 \cdot b_3 \cdot t_3^2 = 0.006\ in^3$

Force

Bolt Tension $\quad T_3 := P_x \cdot \frac{48 \cdot mm}{90\% \cdot 17 \cdot mm} + P_z \cdot \frac{48 \cdot mm}{90\% \cdot 45 \cdot mm \div 2} = 299 \cdot lbf$

Weak Axis Moment $\quad M_3 := T_3 \cdot 6 \cdot mm = 0.07 \cdot kip \cdot in$

Capacity

$\Omega_3 := 1.67$

Weak Axis Moment $\quad M_{n3} := \frac{F_{y3} \cdot Z_{w3}}{\Omega_3} = 0.11\ in \cdot kip$

Interaction

$IR1_3 := \frac{M_3}{M_{n3}} = 0.64$

CheckASD3 = "OK"

© 2019 R&B Wagner, Inc. All Rights Reserved.
WagnerArchitectural.com

#4 Check Bolt Capacity

(2) - M6x1 Bolts, A4-50 Stainless Steel

Properties:

$d_{b4} := 6 \cdot mm$ $\quad F_{y4} := 210 \cdot MPa$ $\quad F_{u4} := 500 \cdot MPa$ $\quad N_4 := \frac{1}{1} \cdot \frac{1}{mm}$

$LE_4 := 0.20 \cdot in$ $\quad F_{us4} := 70ksi$ $\quad SF_4 = 3$

$F_{nt4} := \min\left(0.75 \cdot F_{y4}, \frac{1}{SF_4} \cdot F_{u4}\right) = 22.84 \cdot ksi$ $\quad F_{nv4} := \min\left(0.75 \cdot F_{y4} \div \sqrt{3}, \frac{1}{SF_4} \cdot F_{u4} \div \sqrt{3}\right) = 13.19 \cdot ksi$

$A_{S4} := 0.7854 \cdot \left(d_{b4} - \frac{0.9743}{N_4}\right)^2 = 0.031\, in^2$ $\quad A_{R4} := 0.7854 \cdot \left(d_{b4} - \frac{1.2269}{N_4}\right)^2 = 0.028\, in^2$

Demand

Tension $\quad T_4 := \frac{P_x}{2 \cdot Bolts} \cdot \frac{48 \cdot mm}{90\% \cdot 7 \cdot mm} = 190\, lbf$

Shear $\quad V_4 := \sqrt{\left(P_z \cdot \frac{45 \cdot mm}{26 \cdot mm}\right)^2 + \left(\frac{P_z}{2}\right)^2} = 108\, lbf$

Capacity

Tension Capacity $\quad T_{n4} := F_{nt4} \cdot A_{S4} = 702 \cdot lbf$

Shear Capacity $\quad V_{n4} := F_{nv4} \cdot A_{R4} = 366\, lbf$

Pull-out Capacity

$TSA_{E4} := 8.65 \cdot mm^2$ $\quad TSA_{I4} := 12.19 \cdot mm^2$

Internal Thread Capacity $\quad$ Conditions = "Thin"

$T_{I4} := \frac{LE_4 \cdot N_4 \cdot TSA_{I4} \cdot F_{us4}}{SF_4 \cdot \sqrt{3}} = 1293\, lbf$

External Thread Capacity

$T_{E4} := \min\left(\frac{LE_4 \cdot N_4 \cdot TSA_{E4} \cdot F_{u4}}{SF_4 \cdot \sqrt{3}}, \frac{0.75 \cdot LE_4 \cdot N_4 \cdot TSA_{E4} \cdot F_{y4}}{\sqrt{3}}\right) = 898\, lbf$

Pull-out Capacity $\quad T_{outn4} := \min(T_{I4}, T_{E4}) = 898 \cdot lbf$

Interaction

$IR1_4 := \left(\frac{T_4}{T_{n4}}\right)^2 + \left(\frac{V_4}{V_{n4}}\right)^2 = 0.16$ $\quad IR2_4 := \left(\frac{T_4}{T_{outn4}}\right)^2 = 0.04$

CheckASD4 = "OK"

© 2019 R&B Wagner, Inc. All Rights Reserved.
WagnerArchitectural.com

#5 Check Bolt Capacity

M8x1.25 Bolt, 316 Stainless Steel

Properties:

$d_{b5} := 8 \cdot mm$ $\quad F_{y5} := 30 \cdot ksi$ $\quad F_{u5} := 70 \cdot ksi$ $\quad N_5 := \frac{1}{1.25} \cdot \frac{1}{mm}$

$LE_5 := 0.120 \cdot in$ $\quad F_{us5} := 70ksi$ $\quad SF_5 = 2.5$

$F_{nt5} := \min\left(0.75 \cdot F_{y5}, \frac{1}{SF_5} \cdot F_{u5}\right) = 22.5 \cdot ksi$ $\quad F_{nv5} := \min\left(0.75 \cdot F_{y5} \div \sqrt{3}, \frac{1}{SF_5} \cdot F_{u5} \div \sqrt{3}\right) = 12.99 \cdot ksi$

$A_{S5} := 0.7854 \cdot \left(d_{b5} - \frac{0.9743}{N_5}\right)^2 = 0.056\, in^2$ $\quad A_{R5} := 0.7854 \cdot \left(d_{b5} - \frac{1.2269}{N_5}\right)^2 = 0.051\, in^2$

Demand

Tension $\quad T_5 := P_x \cdot \frac{48 \cdot mm}{90\% \cdot 17 \cdot mm} + P_z \cdot \frac{48 \cdot mm}{90\% \cdot 45 \cdot mm \div 2} = 299\, lbf$

Shear $\quad V_5 := \sqrt{P_x^2 + P_z^2} = 78\, lbf$

Capacity

Tension Capacity $\quad T_{n5} := F_{nt5} \cdot A_{S5} = 1260 \cdot lbf$

Shear Capacity $\quad V_{n5} := F_{nv5} \cdot A_{R5} = 661\, lbf$

Pull-out Capacity

$TSA_{E5} := 15.20 \cdot mm^2$ $\quad TSA_{I5} := 21.04 \cdot mm^2$

Internal Thread Capacity $\quad$ Conditions = "Thin"

$T_{I5} := \frac{0.85 \cdot LE_5 \cdot d_{b5} \cdot F_{us5}}{SF_5} = 900\, lbf$

External Thread Capacity

$T_{E5} := \min\left(\frac{LE_5 \cdot N_5 \cdot TSA_{E5} \cdot F_{u5}}{SF_5 \cdot \sqrt{3}}, \frac{0.75 \cdot LE_5 \cdot N_5 \cdot TSA_{E5} \cdot F_{y5}}{\sqrt{3}}\right) = 746\, lbf$

Pull-out Capacity $\quad T_{outn5} := \min(T_{I5}, T_{E5}) = 746 \cdot lbf$

Interaction

$IR1_5 := \left(\frac{T_5}{T_{n5}}\right)^2 + \left(\frac{V_5}{V_{n5}}\right)^2 = 0.07$ $\quad IR2_5 := \left(\frac{T_5}{T_{outn5}}\right)^2 = 0.16$ $\quad$ CheckASD5 = "OK"

© 2019 R&B Wagner, Inc. All Rights Reserved.
WagnerArchitectural.com

#6 Check Post Wall for Local Bending

0.120" Thick Post Wall, 316 Stainless Steel

Properties:

$t_6 := 0.120 \cdot in$ $\quad b_6 := 2.0 \cdot in$ $\quad F_{y6} := 30 \cdot ksi$ $\quad Z_{w6} := 0.25 \cdot b_6 \cdot t_6^2 = 0.007\, in^3$

Force

Weak Axis Moment $\quad M_6 := \frac{T_5 \cdot 2 \cdot in}{8} = 0.08 \cdot kip \cdot in$

Capacity

$\Omega_6 := 1.67$

Weak Axis Moment $\quad M_{n6} := \frac{F_{y6} \cdot Z_{w6}}{\Omega_6} = 0.13\, in \cdot kip$

Interaction

$IR1_6 := \frac{M_6}{M_{n6}} = 0.6$ $\quad$ CheckASD6 = "OK"

© 2019 R&B Wagner, Inc. All Rights Reserved.
WagnerArchitectural.com

6.4. Flat Clip

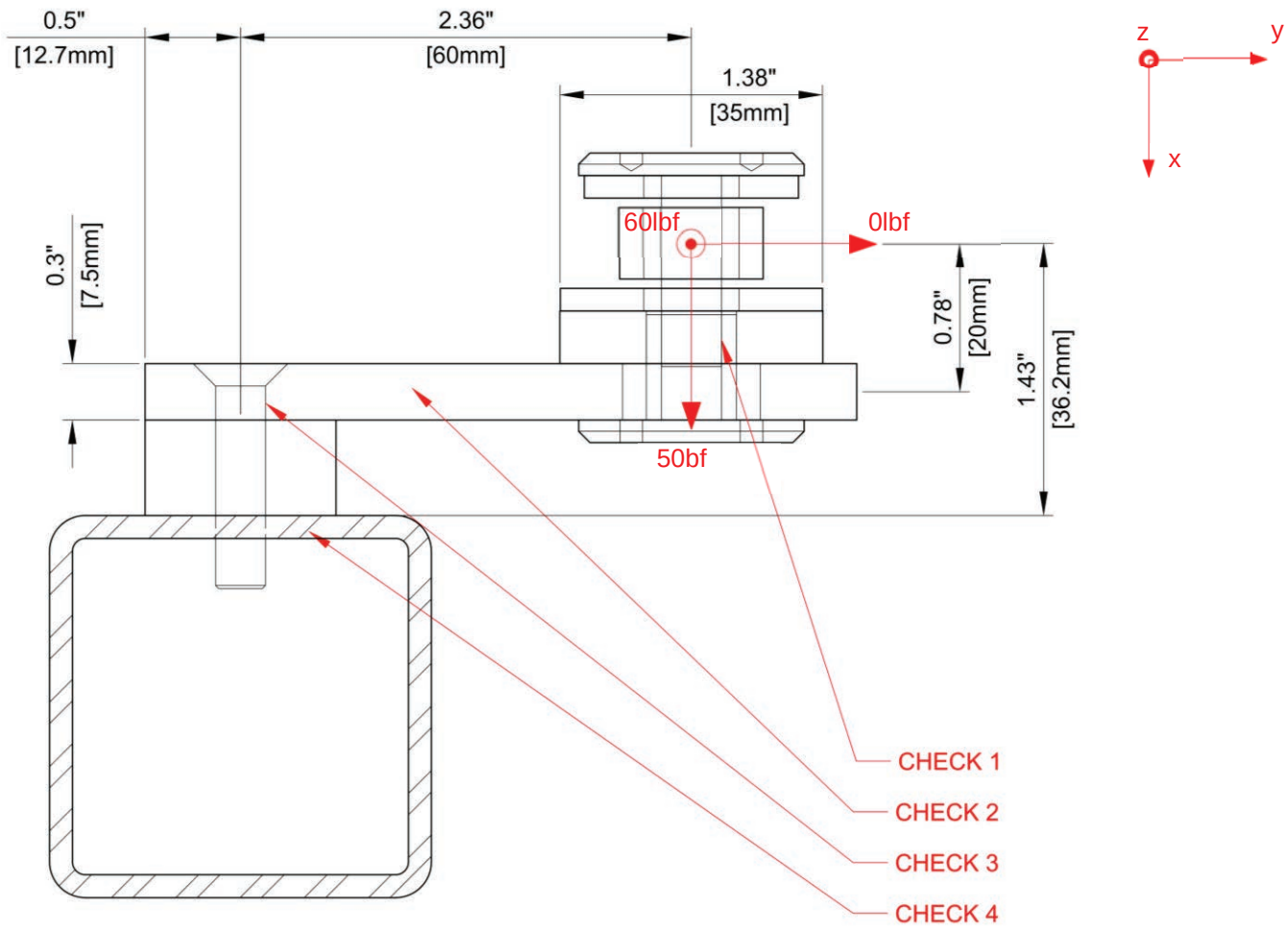

Connection Detail

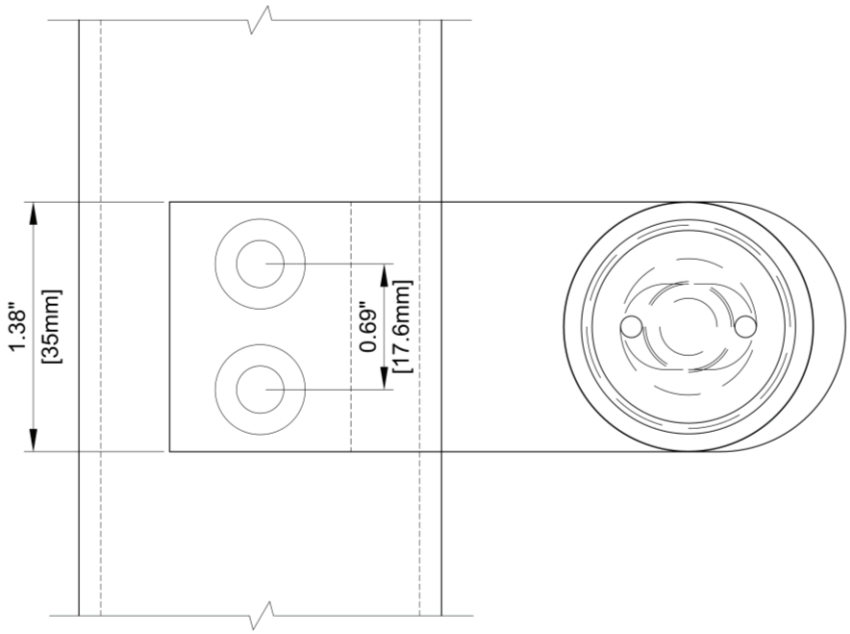

Arm Detail

Loads (ASD)

$P_x := 50 \cdot lbf$ Infill Panel Load $M_x := 0.0 \cdot lbf \cdot in$

$P_y := 0 \cdot lbf$ $M_y := 0.0 \cdot lbf \cdot in$

$P_z := 60 \cdot lbf$ Glass Dead Load $M_z := 0.0 \cdot lbf \cdot in$

#1 Check Bolt Capacity

M8x1.25 Bolt, A4-50 Stainless Steel

Properties:

$d_{b1} := 8 \cdot mm$ $F_{y1} := 210 \cdot MPa$ $F_{u1} := 500 \cdot MPa$ $N_1 := \frac{1}{1.25} \cdot \frac{1}{mm}$

$LE_1 := 0.375 \cdot in$ $F_{us1} := 70ksi$ $SF_1 = 2.5$

$F_{nt1} := \min\left(0.75 \cdot F_{y1}, \frac{1}{SF_1} \cdot F_{u1}\right) = 22.84 \cdot ksi$ $F_{nv1} := \min\left(0.75 \cdot F_{y1} \div \sqrt{3}, \frac{1}{SF_1} \cdot F_{u1} \div \sqrt{3}\right) = 13.19 \cdot ksi$

$A_{S1} := 0.7854 \cdot \left(d_{b1} - \frac{0.9743}{N_1}\right)^2 = 0.056\, in^2$ $A_{R1} := 0.7854 \cdot \left(d_{b1} - \frac{1.2269}{N_1}\right)^2 = 0.051\, in^2$

Demand

Tension $T_1 := P_x + P_z \cdot \frac{20 \cdot mm}{90\% \cdot 35 \cdot mm \div 2} = 126\, lbf$

Shear $V_1 := P_z = 60\, lbf$

Capacity

Tension Capacity $T_{n1} := F_{nt1} \cdot A_{S1} = 1279 \cdot lbf$

Shear Capacity $V_{n1} := F_{nv1} \cdot A_{R1} = 671\, lbf$

Pull-out Capacity

$TSA_{E1} := 15.20 \cdot mm^2$ $TSA_{I1} := 21.04 \cdot mm^2$

Internal Thread Capacity Conditions = "Thick"

$$T_{I1} := \frac{LE_1 \cdot N_1 \cdot TSA_{I1} \cdot F_{us1}}{SF_1 \cdot \sqrt{3}} = 4017\, lbf$$

External Thread Capacity

$$T_{E1} := \min\left(\frac{LE_1 \cdot N_1 \cdot TSA_{E1} \cdot F_{u1}}{SF_1 \cdot \sqrt{3}}, \frac{0.75 \cdot LE_1 \cdot N_1 \cdot TSA_{E1} \cdot F_{y1}}{\sqrt{3}}\right) = 2368\, lbf$$

Pull-out Capacity $T_{outn1} := \min(T_{I1}, T_{E1}) = 2368 \cdot lbf$

Interaction

$IR1_1 := \left(\frac{T_1}{T_{n1}}\right)^2 + \left(\frac{V_1}{V_{n1}}\right)^2 = 0.02$ $IR2_1 := \left(\frac{T_1}{T_{outn1}}\right)^2 = 0$

CheckASD1 = "OK"

#2 Check Plate Capacity

164mm x 35mm x 7.5mm Plate, 316 Stainless Steel

Properties:

$t_2 := 7.5 \cdot mm$ $\quad h_2 := 35 \cdot mm$ $\quad L_2 := 60 \cdot mm$

$F_{y2} := 30ksi$ $\quad F_{u2} := 70ksi$ $\quad E_2 := 29000ksi$

$Z_{s2} := 0.25 \cdot t_2 \cdot h_2^2 = 0.14\,in^3$ $\quad Z_{w2} := 0.25 \cdot h_2 \cdot t_2^2 = 0.03\,in^3$

$I_{w2} := \frac{h_2 \cdot t_2^3}{12} = 0\,in^4$ $\quad S_{s2} := \frac{t_2 \cdot h_2^2}{6} = 0.09\,in^3$

$r_2 := \sqrt{\frac{I_{w2}}{t_2 \cdot h_2}} = 0.09\,in$ $\quad kLr_2 := \frac{2.0 \cdot L_2}{r_2}$

Force

Strong Axis Moment $\quad M_{s2} := P_z \cdot 60 \cdot mm = 0.14 \cdot in \cdot kip$

Weak Axis Moment $\quad M_{w2} := P_x \cdot 60 \cdot mm = 0.12\,in \cdot kip$

Torsion $\quad T_2 := P_z \cdot 20 \cdot mm = 0.05\,in \cdot kip$

Capacity $\quad \Omega_2 := 1.67$

Strong Axis Moment $\quad \frac{L_2 \cdot h_2}{t_2^2} = 37.33 \quad \boxed{<} \quad \frac{0.08 \cdot E_2}{F_{y2}} = 77$

$M_{ns2} := \frac{F_{y2} \cdot Z_{s2}}{\Omega_2} = 2.52 \cdot in \cdot kip$

Weak Axis Moment $\quad M_{nw2} := \frac{F_{y2} \cdot Z_{w2}}{\Omega_2} = 0.54\,in \cdot kip$

Torsion $\quad J_2 := if\left[\frac{h_2}{t_2} < 10, \left(\frac{1}{3} - 0.2 \cdot \frac{t_2}{h_2}\right) \cdot h_2 \cdot t_2^3, \frac{h_2 \cdot t_2^3}{3}\right] = 0.01 \cdot in^4$

$T_{n2} := \frac{0.6 \cdot F_{y2} \cdot J_2}{t_2 \cdot \Omega_2} = 0.38\,in \cdot kip$

Interaction

$IR1_2 := \frac{M_{w2}}{M_{nw2}} + \frac{M_{s2}}{M_{ns2}} + \left(\frac{T_2}{T_{n2}}\right)^2 = 0.29$

$\boxed{CheckASD2 = \text{"OK"}}$

© 2019 R&B Wagner, Inc. All Rights Reserved.
WagnerArchitectural.com

#3 Check Bolt Capacity

(2) - M6x1 Bolt, A4-50 Stainless Steel

Properties:

$d_{b3} := 6 \cdot mm$ $\quad F_{y3} := 210 \cdot MPa$ $\quad F_{u3} := 500 \cdot MPa$ $\quad N_3 := \frac{1}{1} \cdot \frac{1}{mm}$

$LE_3 := 0.120 \cdot in$ $\quad F_{us3} := 70ksi$ $\quad SF_3 = 3$

$F_{nt3} := \min\left(0.75 \cdot F_{y3}, \frac{1}{SF_3} \cdot F_{u3}\right) = 22.84 \cdot ksi$ $\quad F_{nv3} := \min\left(0.75 \cdot F_{y3} \div \sqrt{3}, \frac{1}{SF_3} \cdot F_{u3} \div \sqrt{3}\right) = 13.19 \cdot ksi$

$A_{S3} := 0.7854 \cdot \left(d_{b3} - \frac{0.9743}{N_3}\right)^2 = 0.031\, in^2$ $\quad A_{R3} := 0.7854 \cdot \left(d_{b3} - \frac{1.2269}{N_3}\right)^2 = 0.028\, in^2$

Demand

Tension

$$T_3 := \frac{P_x}{2 \cdot Bolts} + \frac{M_{w2}}{(2 \cdot Bolts) \cdot (90\% \cdot 1.0 \cdot in \div 2)} + \frac{T_2}{18 \cdot mm} = 223\, lbf$$

Shear

$$V_3 := \sqrt{\left(\frac{M_{s2}}{18 \cdot mm}\right)^2 + \left(\frac{P_z}{2}\right)^2} = 202\, lbf$$

Capacity

Tension Capacity $\quad T_{n3} := F_{nt3} \cdot A_{S3} = 702 \cdot lbf$

Shear Capacity $\quad V_{n3} := F_{nv3} \cdot A_{R3} = 366\, lbf$

Pull-out Capacity

$TSA_{E3} := 8.65 \cdot mm^2$ $\quad TSA_{I3} := 12.19 \cdot mm^2$

Internal Thread Capacity $\quad$ Conditions = "Thin"

$$T_{I3} := \frac{0.85 \cdot LE_3 \cdot d_{b3} \cdot F_{us3}}{SF_3} = 562\, lbf$$

External Thread Capacity

$$T_{E3} := \min\left(\frac{LE_3 \cdot N_3 \cdot TSA_{E3} \cdot F_{u3}}{SF_3 \cdot \sqrt{3}}, \frac{0.75 \cdot LE_3 \cdot N_3 \cdot TSA_{E3} \cdot F_{y3}}{\sqrt{3}}\right) = 539\, lbf$$

Pull-out Capacity $\quad T_{outn3} := \min(T_{I3}, T_{E3}) = 539 \cdot lbf$

Interaction

$IR1_3 := \left(\frac{T_3}{T_{n3}}\right)^2 + \left(\frac{V_3}{V_{n3}}\right)^2 = 0.41$ $\quad IR2_3 := \left(\frac{T_3}{T_{outn3}}\right)^2 = 0.17$

CheckASD3 = "OK"

© 2019 R&B Wagner, Inc. All Rights Reserved.
WagnerArchitectural.com

#4 Check Post Wall for Local Bending

0.120" Thick Post Wall, 316 Stainless Steel

Properties:

$t_4 := 0.120 \cdot in$ $\quad b_4 := 2.0 \cdot in + 0.69 \cdot in$ $\quad F_{y4} := 30 \cdot ksi$ $\quad Z_{w4} := 0.25 \cdot b_4 \cdot t_4^2 = 0.01\, in^3$

Force

Weak Axis Moment $\quad M_4 := \frac{(2 \cdot T_3) \cdot 2 \cdot in}{8} = 0.11 \cdot kip \cdot in$

Capacity

$\Omega_4 := 1.67$

Weak Axis Moment $\quad M_{n4} := \frac{F_{y4} \cdot Z_{w4}}{\Omega_4} = 0.17\, in \cdot kip$

Interaction

$IR1_4 := \frac{M_4}{M_{n4}} = 0.64$ $\quad$ CheckASD4 = "OK"

© 2019 R&B Wagner, Inc. All Rights Reserved.
WagnerArchitectural.com

6.5. Spider Clip

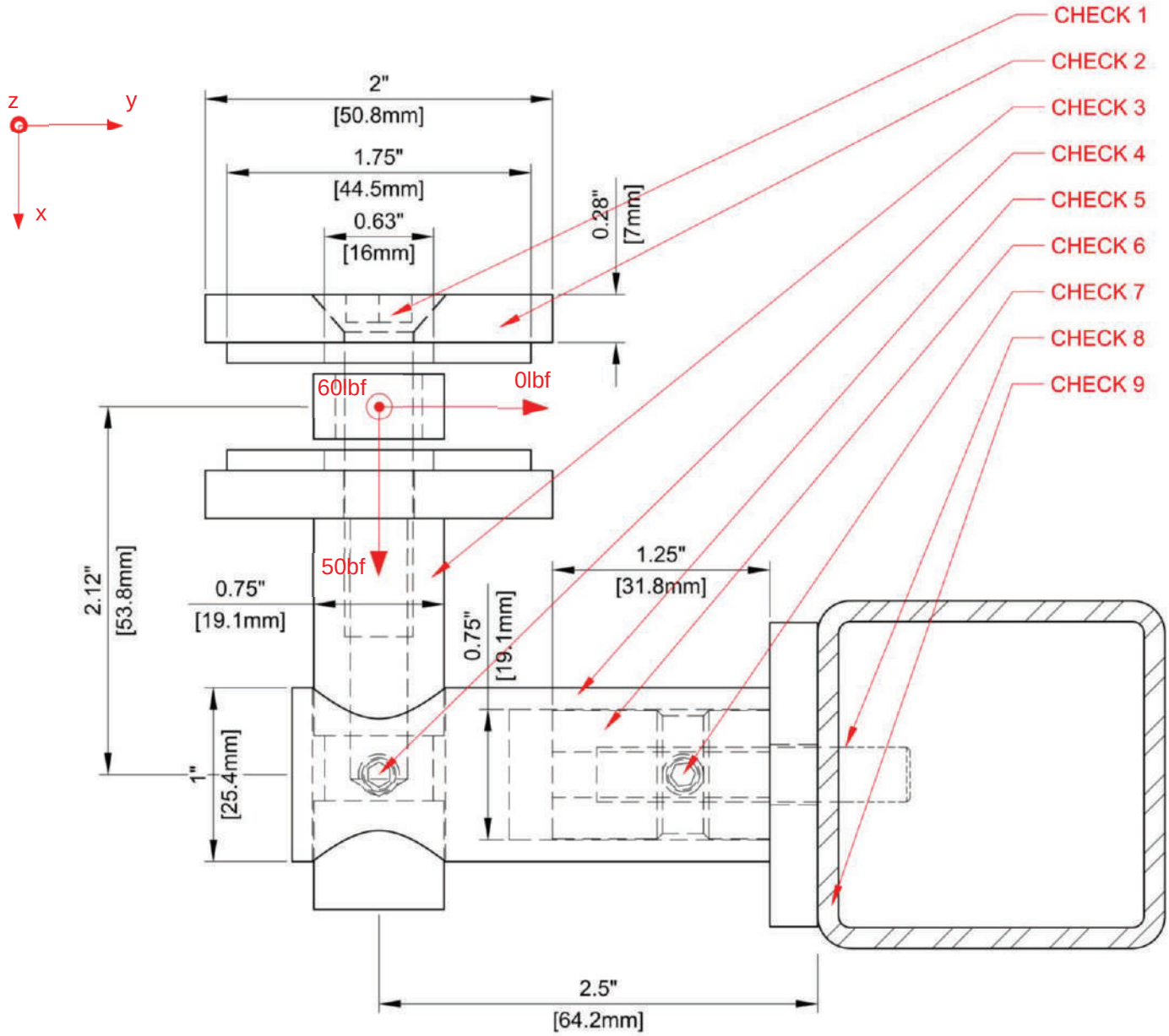

Connection Detail

© 2019 R&B Wagner, Inc. All Rights Reserved.
WagnerArchitectural.com

Loads (ASD)

$P_x := 50 \cdot lbf$ Infill Panel Load $M_x := 0.0 \cdot lbf \cdot in$

$P_y := 0 \cdot lbf$ $M_y := 0.0 \cdot lbf \cdot in$

$P_z := 60 \cdot lbf$ Glass Dead Load $M_z := 0.0 \cdot lbf \cdot in$

#1 Check Bolt Capacity

M10x1.5 Bolt, A4-50 Stainless Steel

Properties:

$d_{b1} := 10 \cdot mm$ $F_{y1} := 210 \cdot MPa$ $F_{u1} := 500 \cdot MPa$ $N_1 := \frac{1}{1.5} \cdot \frac{1}{mm}$

$LE_1 := 0.375 \cdot in$ $F_{us1} := 70ksi$ $SF_1 = 2.5$

$F_{nt1} := \min\left(0.75 \cdot F_{y1}, \frac{1}{SF_1} \cdot F_{u1}\right) = 22.84 \cdot ksi$ $F_{nv1} := \min\left(0.75 \cdot F_{y1} \div \sqrt{3}, \frac{1}{SF_1} \cdot F_{u1} \div \sqrt{3}\right) = 13.19 \cdot ksi$

$A_{S1} := 0.7854 \cdot \left(d_{b1} - \frac{0.9743}{N_1}\right)^2 = 0.089\, in^2$ $A_{R1} := 0.7854 \cdot \left(d_{b1} - \frac{1.2269}{N_1}\right)^2 = 0.081\, in^2$

Demand

Tension $T_1 := P_x + P_z \cdot \frac{2.125 \cdot in}{90\% \cdot 0.75 \cdot in \div 2} = 428\, lbf$

Shear $V_1 := P_z = 60\, lbf$

Capacity

Tension Capacity $T_{n1} := F_{nt1} \cdot A_{S1} = 2027 \cdot lbf$

Shear Capacity $V_{n1} := F_{nv1} \cdot A_{R1} = 1069\, lbf$

Pull-out Capacity

$TSA_{E1} := 23.37 \cdot mm^2$ $TSA_{I1} := 32.22 \cdot mm^2$

Internal Thread Capacity Conditions = "Thick"

$$T_{I1} := \frac{LE_1 \cdot N_1 \cdot TSA_{I1} \cdot F_{us1}}{SF_1 \cdot \sqrt{3}} = 5127\, lbf$$

External Thread Capacity

$$T_{E1} := \min\left(\frac{LE_1 \cdot N_1 \cdot TSA_{E1} \cdot F_{u1}}{SF_1 \cdot \sqrt{3}}, \frac{0.75 \cdot LE_1 \cdot N_1 \cdot TSA_{E1} \cdot F_{y1}}{\sqrt{3}}\right) = 3034\, lbf$$

Pull-out Capacity $T_{outn1} := \min(T_{I1}, T_{E1}) = 3034 \cdot lbf$

Interaction

$$IR1_1 := \left(\frac{T_1}{T_{n1}}\right)^2 + \left(\frac{V_1}{V_{n1}}\right)^2 = 0.05$$

$$IR2_1 := \left(\frac{T_1}{T_{outn1}}\right)^2 = 0.02$$

CheckASD1 = "OK"

#2 Check Clamp Capacity

2" Dia Clamp, 316 Stainless Steel

Properties:

$d_{b2} := 0.625 \cdot in$ $\quad D_{b2} := 2.0 \cdot in$ $\quad D_{w2} := 1.75 \cdot in$

$F_{y2} := 30ksi$ $\quad F_{u2} := 70ksi$ $\quad t_2 := 7.0 \cdot mm$

$$b_2 := 2 \cdot \sqrt{\left(\frac{D_{b2} - d_{b2}}{2}\right) \cdot \left(D_{b2} - \frac{D_{b2} - d_{b2}}{2}\right)} = 1.9\,in \qquad Z_{w2} := 0.25 \cdot b_2 \cdot t_2^{\,2} = 0.04\,in^3$$

Force:

Moment

$$M_2 := P_z \cdot \frac{2.125 \cdot in}{90\% \cdot D_{w2} \div 2} \cdot \frac{\left(90\% \cdot D_{w2} - d_{b2}\right)}{2} = 0.08 \cdot in \cdot kip$$

Capacity

$\Omega_2 := 1.67$

Moment Capacity

$$M_{n2} := \frac{F_{y2} \cdot Z_{w2}}{\Omega_2} = 0.65 \cdot in \cdot kip$$

Interaction

$$IR1_2 := \frac{M_2}{M_{n2}} = 0.12$$

CheckASD2 = "OK"

© 2019 R&B Wagner, Inc. All Rights Reserved.
WagnerArchitectural.com

#3 Check Bracket Capacity

3/4" Dia Bracket Shaft, 316 Stainless Steel

Properties:

$d_3 := 0.75 \cdot in$ $\quad L_3 := 2.125in$ $\quad S_3 := \pi \cdot d_3^{\,3} \div 32 = 0.04\,in^3$

$A_3 := \frac{\pi \cdot d_3^{\,2}}{4} = 0.44\,in^2$ $\quad r_3 := \frac{d_3}{4} = 0.19\,in$ $\quad Z_3 := d_3^{\,3} \div 6 = 0.0703\,in^3$

$F_{y3} := 30ksi$ $\quad E_3 := 29000ksi$ $\quad kLr_3 := \frac{1.0 \cdot L_3}{r_3} = 11$

Force

Axial Compression $\quad P_3 := P_x = 0.05 \cdot kip$

Moment $\quad M_3 := P_z \cdot 2.125 \cdot in = 0.13\,in \cdot kip$

Capacity $\quad \Omega_3 := 1.67$

Compression Strength $\quad kLr_3 = 11 \quad \boxed{<} \quad 3.77 \cdot \sqrt{\frac{E_3}{F_{y3}}} = 117$

$$F_{e3} := \frac{\pi^2 \cdot E_3}{(kLr_3)^2} = 2228.34 \cdot ksi$$

$$F_{cr3} := 0.500^{(F_{y3} \div F_{e3})} \cdot F_{y3} = 29.72 \cdot ksi$$

$$P_{n3} := \frac{(F_{cr3} \cdot A_3)}{\Omega_3} = 8 \cdot kip$$

Moment Capacity $\quad M_{n3} := \min\left(\frac{F_{y3} \cdot Z_3}{\Omega_3}, \frac{1.6 \cdot F_{y3} \cdot S_3}{\Omega_3}\right) = 1190 \cdot in \cdot lbf$

Interaction

$IR1_3 := \frac{M_3}{M_{n3}} = 0.11$ $\quad$ CheckASD3 = "OK"

© 2019 R&B Wagner, Inc. All Rights Reserved.
WagnerArchitectural.com

#4 Check Set Screw Capacity

M6x1 Set Screw, A4-50 Stainless Steel

Properties:

$d_{b4} := 6 \cdot mm$ $\quad F_{y4} := 210 \cdot MPa$ $\quad F_{u4} := 500 \cdot MPa$ $\quad N_4 := \frac{1}{1.0} \cdot \frac{1}{mm}$

$F_{nt4} := \min\left(0.75 \cdot F_{y4}, \frac{1}{SF_4} \cdot F_{u4}\right) = 22.84 \cdot ksi$ $\quad F_{nv4} := \min\left(0.75 \cdot F_{y4} \div \sqrt{3}, \frac{1}{SF_4} \cdot F_{u4} \div \sqrt{3}\right) = 13.19 \cdot ksi$

$A_{S4} := 0.7854 \cdot \left(d_{b4} - \frac{0.9743}{N_4}\right)^2 = 0.031\ in^2$ $\quad A_{R4} := 0.7854 \cdot \left(d_{b4} - \frac{1.2269}{N_4}\right)^2 = 0.028\ in^2$

Demand

Tension $\quad T_4 := 0.0 \cdot lbf = 0$

Shear $\quad V_4 := P_x = 50\ lbf$

Capacity

Tension Capacity $\quad T_{n4} := F_{nt4} \cdot A_{S4} = 702 \cdot lbf$

Shear Capacity $\quad V_{n4} := F_{nv4} \cdot A_{R4} = 366\ lbf$

Interaction

$$IR1_4 := \left(\frac{T_4}{T_{n4}}\right)^2 + \left(\frac{V_4}{V_{n4}}\right)^2 = 0.02$$

CheckASD4 = "OK"

© 2019 R&B Wagner, Inc. All Rights Reserved.
WagnerArchitectural.com

#5 Check Bracket Capacity

1" Dia Bracket Shaft, 316 Stainless Steel

Properties:

$d_5 := 1.0 \cdot in$ $\quad d_{i5} := 0.75 \cdot in$ $\quad L_5 := 2.5 \cdot in$

$A_5 := \frac{\pi \cdot \left(d_5^2 - d_{i5}^2\right)}{4} = 0.34\,in^2$ $\quad r_5 := \frac{\sqrt{d_5^2 + d_{i5}^2}}{4} = 0.31\,in$ $\quad Z_5 := \left(d_5^3 - d_{i5}^3\right) \div 6 = 0.1\,in^3$

$F_{y5} := 30ksi$ $\quad E_5 := 29000ksi$ $\quad t_5 := \left(d_5 - d_{i5}\right) \div 2 = 0.13\,in$

$kLr_5 := \frac{2.0 \cdot L_5}{r_5} = 16$

$\frac{d_5}{t_5} = 8$ $\quad \boxed{<}$ $\quad 0.07 \cdot \frac{E_5}{F_{y5}} = 68$ $\quad$:. Compact Section for Bending

Force

Axial Compression $\quad P_5 := 0.0 \cdot lbf$

Moment $\quad M_5 := 2.5 \cdot in \cdot \sqrt{P_x^2 + P_z^2} = 0.2\,in \cdot kip$

Capacity $\quad \Omega_5 := 1.67$

Compression Strength $\quad kLr_5 = 16$ $\quad \boxed{<}$ $\quad 3.77 \cdot \sqrt{\frac{E_5}{F_{y5}}} = 117$

$F_{e5} := \frac{\pi^2 \cdot E_5}{\left(kLr_5\right)^2} = 1118.04 \cdot ksi$

$F_{cr5} := 0.500^{\left(F_{y5} \div F_{e5}\right)} \cdot F_{y5} = 29.45 \cdot ksi$

$P_{n5} := \frac{\left(F_{cr5} \cdot A_5\right)}{\Omega_5} = 6 \cdot kip$

Moment Capacity $\quad M_{n5} := \frac{F_{y5} \cdot Z_5}{\Omega_5} = 1731 \cdot in \cdot lbf$

Interaction

$IR1_5 := \frac{P_5}{2P_{n5}} + \frac{M_5}{M_{n5}} = 0.11$ $\quad \boxed{CheckASD5 = \text{"OK"}}$

© 2019 R&B Wagner, Inc. All Rights Reserved.
WagnerArchitectural.com

#6 Check Insert Capacity

3/4" Dia Insert Shaft, 316 Stainless Steel

Properties:

$d_6 := 0.75 \cdot in$ $\quad L_6 := 1.25in$ $\quad S_6 := \pi \cdot d_6^3 \div 32 = 0.04\,in^3$

$A_6 := \frac{\pi \cdot d_6^2}{4} = 0.44\,in^2$ $\quad r_6 := \frac{d_6}{4} = 0.19\,in$ $\quad Z_6 := d_6^3 \div 6 = 0.0703\,in^3$

$F_{y6} := 30ksi$ $\quad E_6 := 29000ksi$ $\quad kLr_6 := \frac{1.0 \cdot L_6}{r_6} = 7$

Force

Axial Compression $\quad P_6 := 0.0 \cdot lbf$

Moment $\quad M_6 := 2.5 \cdot in \cdot \sqrt{P_x^2 + P_z^2} = 0.2\,in \cdot kip$

Capacity $\quad \Omega_6 := 1.67$

Compression Strength $\quad kLr_6 = 7 \quad \boxed{<} \quad 3.77 \cdot \sqrt{\frac{E_6}{F_{y6}}} = 117$

$$F_{e6} := \frac{\pi^2 \cdot E_6}{(kLr_6)^2} = 6439.92 \cdot ksi$$

$$F_{cr6} := 0.500^{(F_{y6} \div F_{e6})} \cdot F_{y6} = 29.9 \cdot ksi$$

$$P_{n6} := \frac{(F_{cr6} \cdot A_6)}{\Omega_6} = 8 \cdot kip$$

Moment Capacity $\quad M_{n6} := \min\left(\frac{F_{y6} \cdot Z_6}{\Omega_6}, \frac{1.6 \cdot F_{y6} \cdot S_6}{\Omega_6}\right) = 1190 \cdot in \cdot lbf$

Interaction

$$IR1_6 := \frac{M_6}{M_{n6}} = 0.16$$

$\boxed{CheckASD6 = \text{"OK"}}$

© 2019 R&B Wagner, Inc. All Rights Reserved.
WagnerArchitectural.com

#7 Check Set Screw Capacity

M6x1 Set Screw, A4-50 Stainless Steel

Properties:

$d_{b7} := 6 \cdot mm$ $\quad F_{y7} := 210 \cdot MPa$ $\quad F_{u7} := 500 \cdot MPa$ $\quad N_7 := \frac{1}{1.0} \cdot \frac{1}{mm}$

$F_{nt7} := \min\left(0.75 \cdot F_{y7}, \frac{1}{SF_7} \cdot F_{u7}\right) = 22.84 \cdot ksi$ $\quad F_{nv7} := \min\left(0.75 \cdot F_{y7} \div \sqrt{3}, \frac{1}{SF_7} \cdot F_{u7} \div \sqrt{3}\right) = 13.19 \cdot ksi$

$A_{S7} := 0.7854 \cdot \left(d_{b7} - \frac{0.9743}{N_7}\right)^2 = 0.031\,in^2$ $\quad A_{R7} := 0.7854 \cdot \left(d_{b7} - \frac{1.2269}{N_7}\right)^2 = 0.028\,in^2$

Demand

Tension $\quad T_7 := 0.0 \cdot lbf$

Shear $\quad V_7 := P_y = 0$

Capacity

Tension Capacity $\quad T_{n7} := F_{nt7} \cdot A_{S7} = 702 \cdot lbf$

Shear Capacity $\quad V_{n7} := F_{nv7} \cdot A_{R7} = 366\,lbf$

Interaction

$$IR1_7 := \left(\frac{T_7}{T_{n7}}\right)^2 + \left(\frac{V_7}{V_{n7}}\right)^2 = 0$$

CheckASD7 = "OK"

© 2019 R&B Wagner, Inc. All Rights Reserved.
WagnerArchitectural.com

#8 Check Bolt Capacity

M8x1.25 Bolt, A4-50 Stainless Steel

Properties:

$d_{b8} := 8 \cdot mm$ $\quad F_{y8} := 210 \cdot MPa$ $\quad F_{u8} := 500 \cdot MPa$ $\quad N_8 := \frac{1}{1.25} \cdot \frac{1}{mm}$

$LE_8 := 0.120 \cdot in$ $\quad F_{us8} := 70ksi$ $\quad SF_8 = 2.5$

$F_{nt8} := \min\left(0.75 \cdot F_{y8}, \frac{1}{SF_8} \cdot F_{u8}\right) = 22.84 \cdot ksi$ $\quad F_{nv8} := \min\left(0.75 \cdot F_{y8} \div \sqrt{3}, \frac{1}{SF_8} \cdot F_{u8} \div \sqrt{3}\right) = 13.19 \cdot ksi$

$A_{S8} := 0.7854 \cdot \left(d_{b8} - \frac{0.9743}{N_8}\right)^2 = 0.056\, in^2$ $\quad A_{R8} := 0.7854 \cdot \left(d_{b8} - \frac{1.2269}{N_8}\right)^2 = 0.051\, in^2$

Demand

Tension $\quad T_8 := \frac{2.5 \cdot in \cdot \sqrt{P_x^2 + P_z^2}}{90\% \cdot 0.75 \cdot in \div 2} = 579\, lbf$

Shear $\quad V_8 := \sqrt{P_x^2 + P_z^2} = 78\, lbf$

Capacity

Tension Capacity $\quad T_{n8} := F_{nt8} \cdot A_{S8} = 1279 \cdot lbf$

Shear Capacity $\quad V_{n8} := F_{nv8} \cdot A_{R8} = 671\, lbf$

Pull-out Capacity

$TSA_{E8} := 15.20 \cdot mm^2$ $\quad TSA_{I8} := 21.04 \cdot mm^2$

Internal Thread Capacity $\quad$ Conditions = "Thin"

$T_{I8} := \frac{0.85 \cdot LE_8 \cdot d_{b8} \cdot F_{us8}}{SF_8} = 900\, lbf$

External Thread Capacity

$T_{E8} := \min\left(\frac{LE_8 \cdot N_8 \cdot TSA_{E8} \cdot F_{u8}}{SF_8 \cdot \sqrt{3}}, \frac{0.75 \cdot LE_8 \cdot N_8 \cdot TSA_{E8} \cdot F_{y8}}{\sqrt{3}}\right) = 758\, lbf$

Pull-out Capacity $\quad T_{outn8} := \min(T_{I8}, T_{E8}) = 758 \cdot lbf$

Interaction

$IR1_8 := \left(\frac{T_8}{T_{n8}}\right)^2 + \left(\frac{V_8}{V_{n8}}\right)^2 = 0.22$ $\quad IR2_8 := \left(\frac{T_8}{T_{outn8}}\right)^2 = 0.58$ $\quad$ CheckASD8 = "OK"

© 2019 R&B Wagner, Inc. All Rights Reserved.
WagnerArchitectural.com

#9 Check Post Wall for Local Bending

0.120" Thick Post Wall, 316 Stainless Steel

Properties:

$t_9 := 0.120 \cdot in$ $\quad b_9 := 2 \cdot \tan(60 \cdot deg) \cdot 1 \cdot in = 3.46\,in$ $\quad F_{y9} := 30 \cdot ksi$ $\quad Z_{w9} := 0.25 \cdot b_9 \cdot t_9^2 = 0.012\,in^3$

Force

Weak Axis Moment $\quad M_9 := \frac{T_8 \cdot 2 \cdot in}{8} = 0.14 \cdot kip \cdot in$

Capacity

$\Omega_9 := 1.67$

Weak Axis Moment $\quad M_{n9} := \frac{F_{y9} \cdot Z_{w9}}{\Omega_9} = 0.22\,in \cdot kip$

Interaction

$IR1_9 := \frac{M_9}{M_{n9}} = 0.65$ $\quad$ CheckASD9 = "OK"

© 2019 R&B Wagner, Inc. All Rights Reserved.
WagnerArchitectural.com

6.6. Handrail Connection

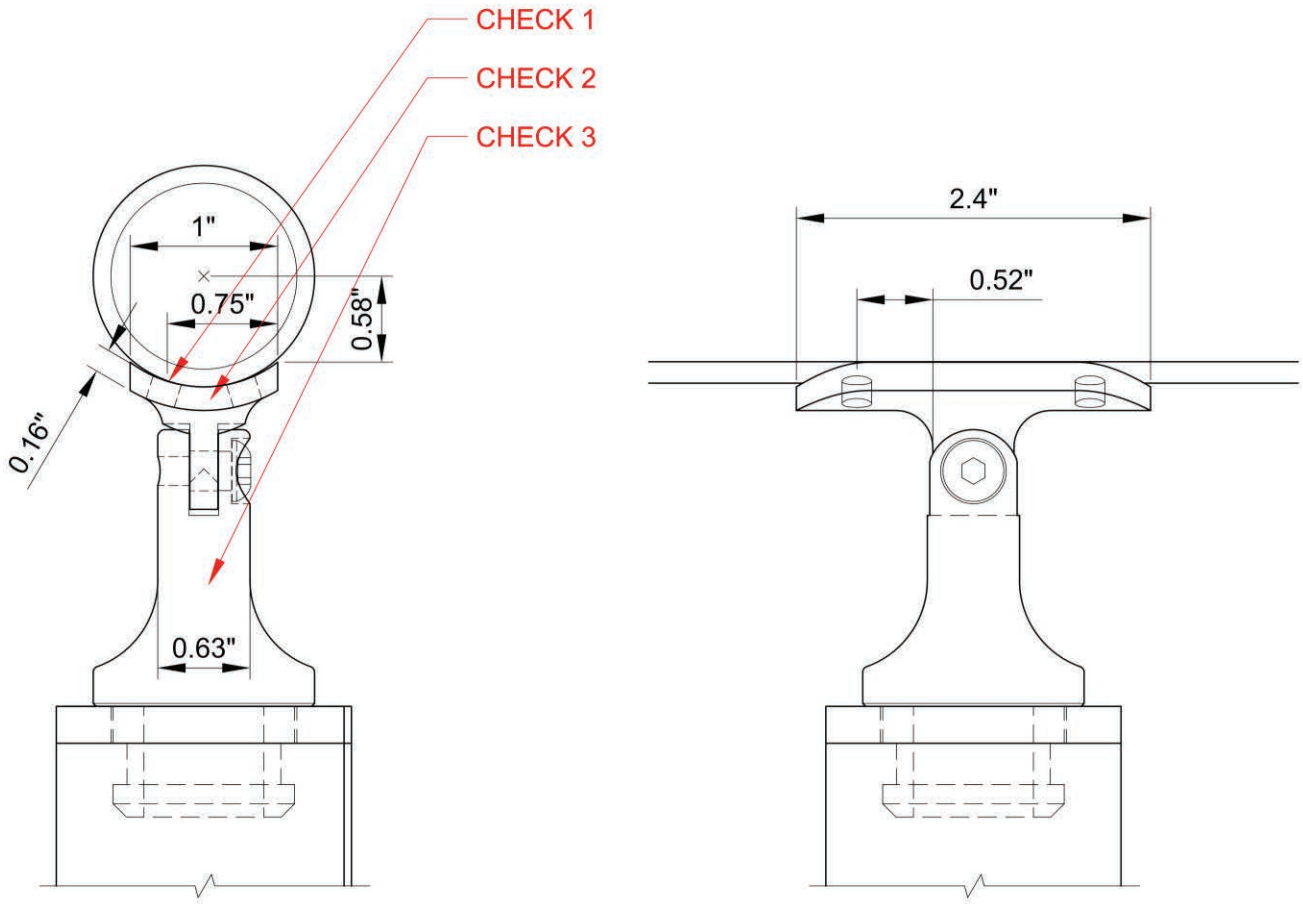

Connection Detail

© 2019 R&B Wagner, Inc. All Rights Reserved.
WagnerArchitectural.com

Loads (ASD)

$P := 200 \cdot lbf$

#1 Check Bolt Capacity

(2) - #10-16 Bolts, 316 Stainless Steel, Condition A

Properties:

$d_{b1} := 0.1900 \cdot in$ $\quad F_{y1} := 30 \cdot ksi$ $\quad F_{u1} := 75ksi$ $\quad N_1 := 16 \cdot \frac{1}{in}$

$K_1 := 0.1350 \cdot in$ $\quad LE_1 := 0.145 \cdot in$ $\quad F_{us1} := 70ksi$ $\quad SF_1 = 3$

$$F_{nt1} := \min\left(0.75 \cdot F_{y1}, \frac{1}{SF_1} \cdot F_{u1}\right) = 22.5 \cdot ksi$$

$$F_{nv1} := \min\left(0.75 \cdot F_{y1} \div \sqrt{3}, \frac{1}{SF_1} \cdot F_{u1} \div \sqrt{3}\right) = 12.99 \cdot k$$

$$A_{S1} := 0.7854 \cdot K_1^2 = 0.014\, in^2$$

$$A_{R1} := 0.7854 \cdot K_1^2 = 0.014\, in^2$$

Demand

Tension

$$T_1 := \frac{P \cdot 0.58 \cdot in}{90\% \cdot 0.75 \cdot in} = 172\, lbf$$

Shear

$$V_1 := \frac{P}{2 \cdot Bolts} = 100\, lbf$$

Capacity

Tension Capacity

$$T_{n1} := F_{nt1} \cdot A_{S1} = 322 \cdot lbf$$

Shear Capacity

$$V_{n1} := F_{nv1} \cdot A_{R1} = 186\, lbf$$

Pull-out Capacity

$TSA_{E1} := 0.0110 \cdot in^2$ $\quad TSA_{I1} := 0.0170$

Internal Thread Capacity

Conditions = "Thin"

$$T_{I1} := \frac{0.85 \cdot LE_1 \cdot d_{b1} \cdot F_{us1}}{SF_1} = 546\, lbf$$

External Thread Capacity

$$T_{E1} := \min\left(\frac{LE_1 \cdot N_1 \cdot TSA_{E1} \cdot F_{u1}}{SF_1 \cdot \sqrt{3}}, \frac{0.75 \cdot LE_1 \cdot N_1 \cdot TSA_{E1} \cdot F_{y1}}{\sqrt{3}}\right) = 332\, lbf$$

Pull-out Capacity

$$T_{outn1} := \min(T_{I1}, T_{E1}) = 332 \cdot lbf$$

Interaction

$$IR1_1 := \left(\frac{T_1}{T_{n1}}\right)^2 + \left(\frac{V_1}{V_{n1}}\right)^2 = 0.57$$

$$IR2_1 := \frac{T_1}{T_{outn1}} = 0.52$$

CheckASD1 = "OK"

© 2019 R&B Wagner, Inc. All Rights Reserved.
WagnerArchitectural.com

#1 Check Circular Weld

1/8" Fillet Weld, All Around, 70ksi Min. Filler Strength

Capacity

Capacity OK by inspection

#2 Check Saddle Bracket for Bending

14-1/4" x 7" x 5/8" Plate, A572 Gr. 50 Carbon Steel

Properties:

$F_{y2} := 30 \cdot ksi$

$Z_2 := 0.0092 \cdot in^3$

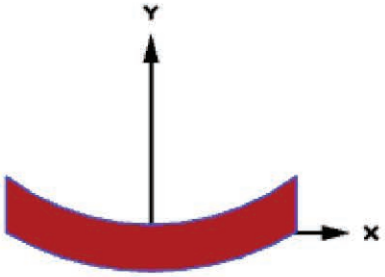

Plastic Properties

Zx	0.0092 in³
Zy	0.0437 in³

Force

Weak Axis Moment $M_2 := T_1 \cdot 0.520 \cdot in = 0.09 \cdot kip \cdot in$

Capacity

$\Omega_2 := 1.67$

Weak Axis Moment $M_{n2} := \frac{F_{y2} \cdot Z_2}{\Omega_2} = 0.17\, in \cdot kip$

Interaction

$IR1_2 := \frac{M_2}{M_{n2}} = 0.54$

CheckASD2 = "OK"

#3 Check Bracket Capacity

5/8" Dia Bracket and 1/4" Bolt , 316 Stainless Steel

Capacity

Capacity OK per Test Report P18-0055C (Heavy Duty Weld Flange Test Report) by Anderson Laboratories, Inc.
Refer to Appendix I.

© 2019 R&B Wagner, Inc. All Rights Reserved.
WagnerArchitectural.com

7. Railing Glass Design

7.1. General Design Criteria

Young's Modulus: 10,400,000 psi
Poisson Ratio: 0.22
Coefficient of Thermal Expansion = 4.9 x 10^{-6} in/in/°F

Per IBC 2015, Section 2407.1.1 Loads on Glass Handrails and Guards, use a design factor of 4.0.
Per AAMA CW-12-84, use a design factor against Modulus of Rupture for Flexure.

Allowable Glass Stress = 24,000psi (Modulus of Rupture of Fully Tempered Glass) / 4 SF = 6,000psi

The glass is analyzed with the Minimum Thickness per Table 4 in ASTM E1300 or per EN14179-1:

Dimensional Tolerances for Transparent Flat Glass per ASTM C1036

Nominal Designation		**Thickness Range**	
Imperial (US)	SI (Metric)	Minimum *(mm)*	Maximum *(mm)*
5/32"	4 mm	0.149" *(3.78)*	0.165" *(4.19)*
3/16"	5 mm	0.180" *(4.57)*	0.199" *(5.05)*
1/4"	6 mm	0.219" *(5.56)*	0.244" *(6.20)*
5/16"	8 mm	0.292" *(7.42)*	0.332" *(8.43)*
3/8"	10 mm	0.355" *(9.02)*	0.406" *(10.31)*
1/2"	12 mm	0.469" *(11.91)*	0.531" *(13.49)*
5/8"	16 mm	0.595" *(15.09)*	0.656" *(16.66)*
3/4"	19 mm	0.719" *(18.26)*	0.781" *(19.84)*

Note: Table for reference only

7.2. SG Interlayer

Thickness = 0.060"

Temp (C)	Temp (F)	Load Duration	Load Type	Young's Modulus (psi)	Poisson's Ratio
24	75	3 sec	Wind*	81,502	0.453

7.3. Overall Location and Geometry

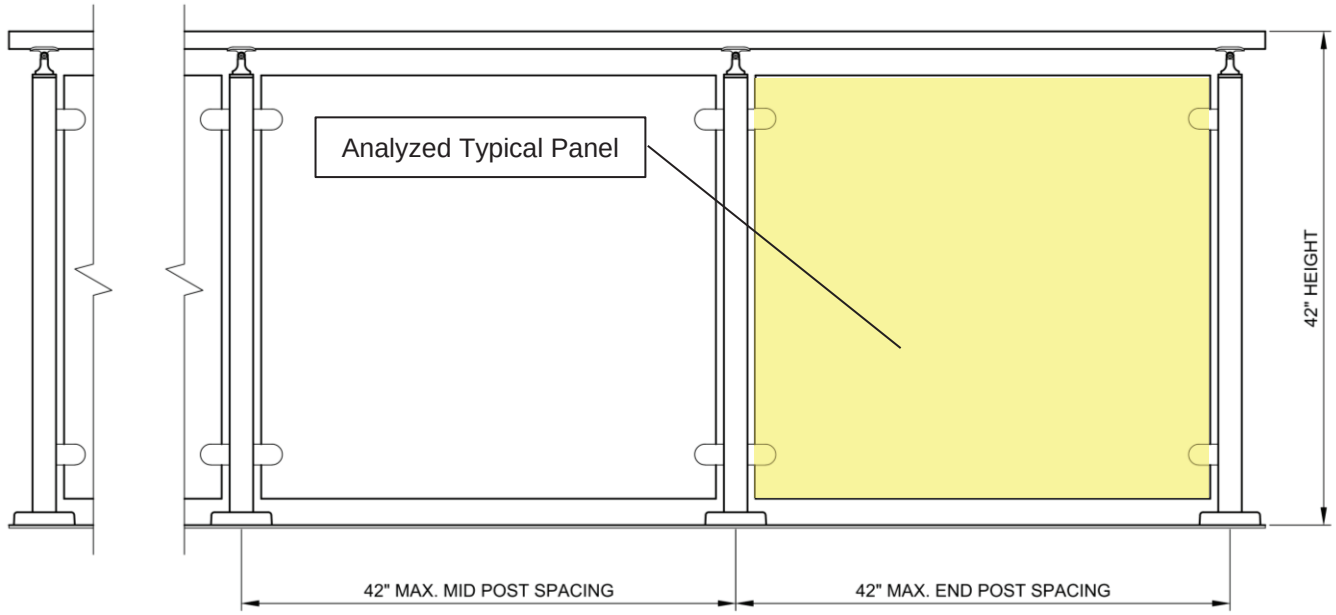

7.4. Glass Panel – Glass Clip Series

7.4.1. Glass Panel Dimensions

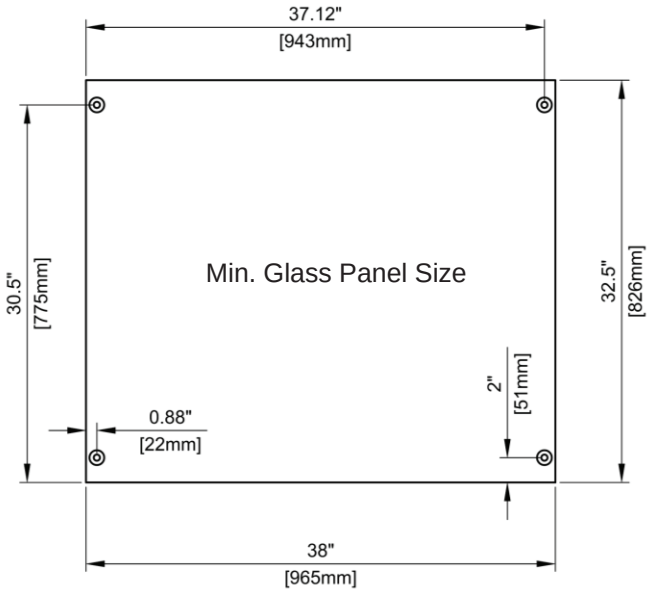

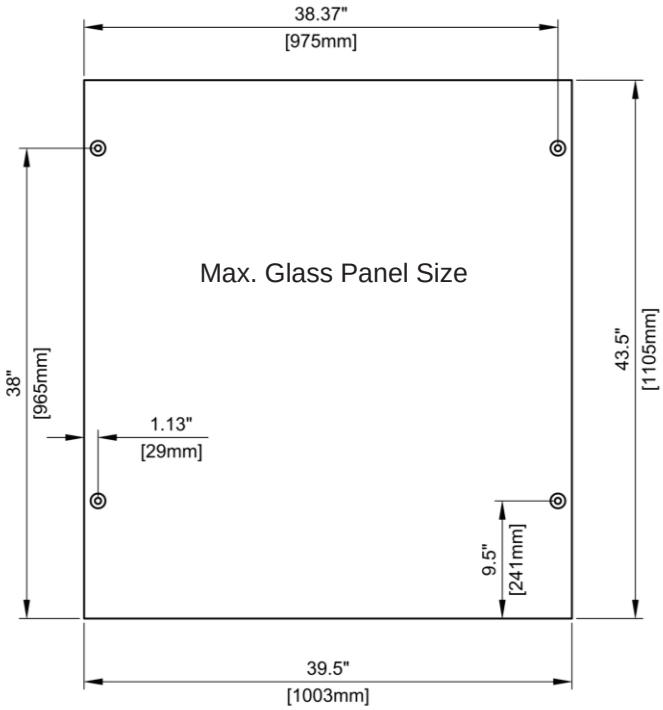

Min. Glass Panel Dimensions (W x H) = 38” x 32-1/2”.

Max. Glass Panel Dimensions (W x H) = 39-1/2” x 43-1/2”.

Max. and Min. glass dimensions create a design envelope to which the glass analysis applies. They do not guarantee that every glass panel size within these boundaries will fit into the railing system. Follow the applicable railing glass size guideline and standards and consult with the glass manufacturer for manufacturing tolerances.

7.4.2. Glass Composition

1.) 1/4” Fully Tempered Glass
2.) 0.06” SG Interlayer
3.) 1/4” Fully Tempered Glass

Note: Min. glass infill panel nominal thickness = 9/16”. Max. glass infill panel nominal thickness = 11/16”

All glass panels to be fully tempered and laminated with SG interlayer.

7.4.3. Glass Loads

PL = 5psf
LL = 50plf (for deflection purposes only)
LLc = 50lbf

Note: Glass panels are analyzed for all applicable load combinations. Only the governing load combination is shown in the result section.

© 2019 R&B Wagner, Inc. All Rights Reserved.
WagnerArchitectural.com

7.4.4. Stress Utilization

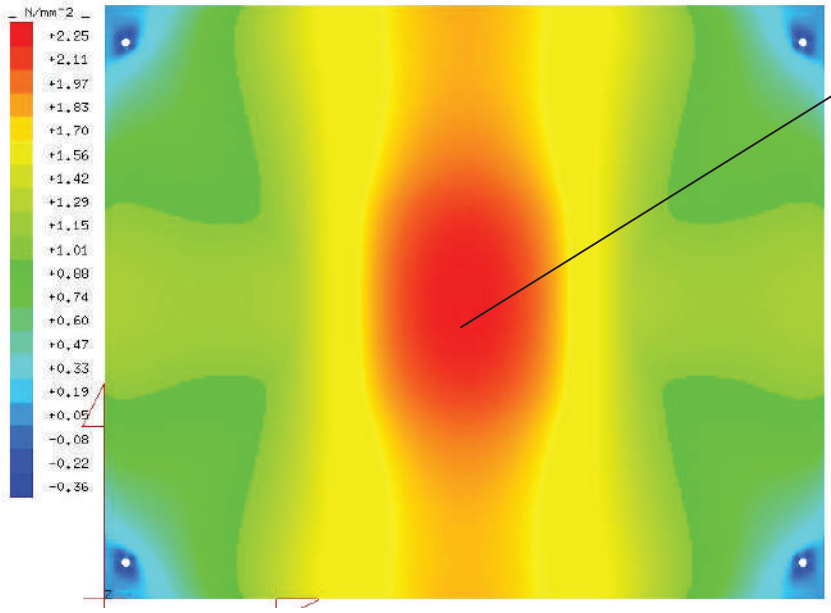

Max. Principal Stress = 2.25 MPa = 326 psi < Allowable Stress = 6,000psi OK

Load Case: DL + LLc

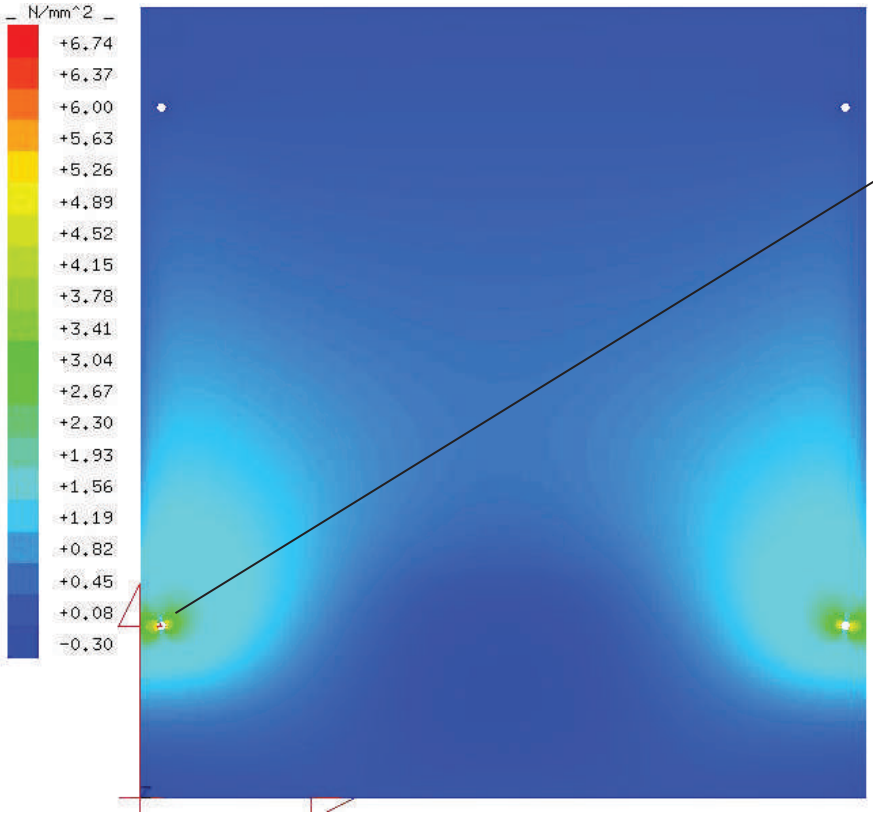

Max. Principal Stress = 6.74 MPa = 980 psi < Allowable Stress = 6,000psi OK

Load Case: DL + LLc

© 2019 R&B Wagner, Inc. All Rights Reserved.
WagnerArchitectural.com

7.4.5. Deflection Utilization

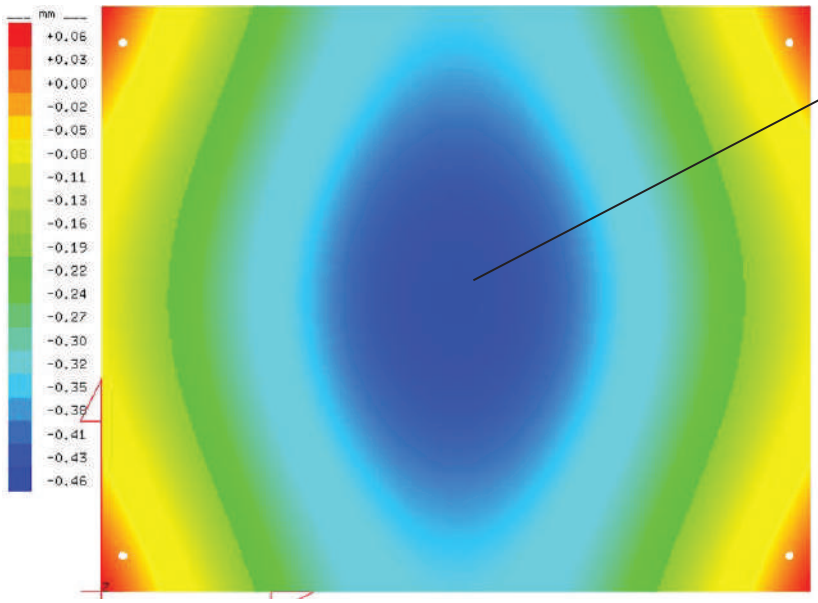

Max. Deflection = 0.04” < L/50 = 0.73” OK

Load Case: DL + LLc

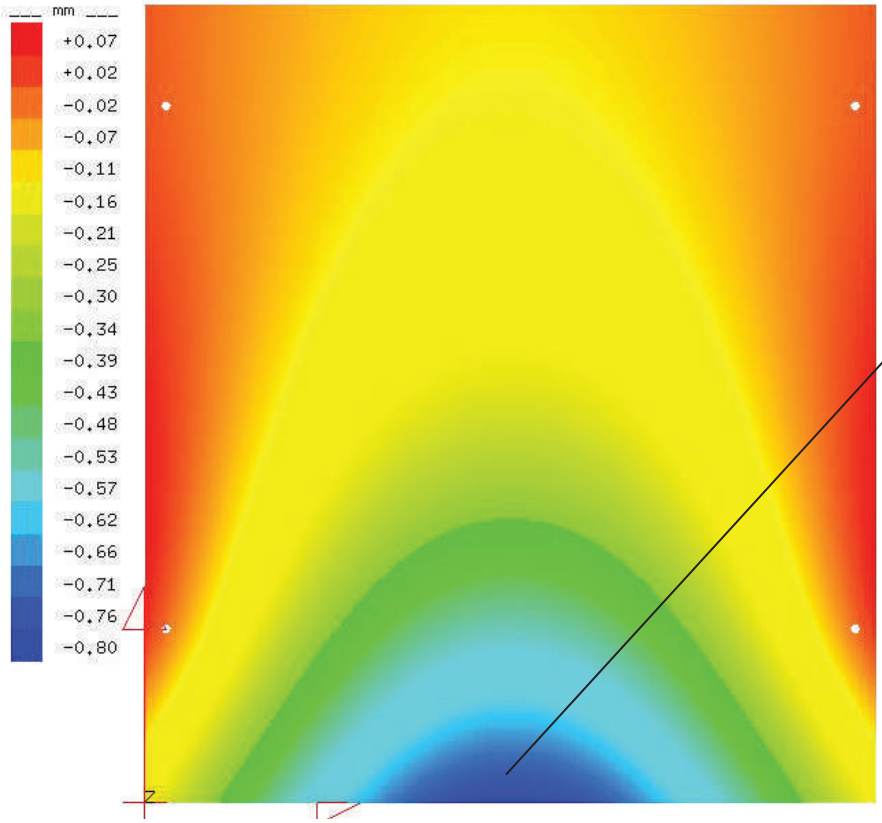

Max. Deflection = 0.03” < L/50 = 0.73” OK

Load Case: DL + LLc

© 2019 R&B Wagner, Inc. All Rights Reserved.
WagnerArchitectural.com

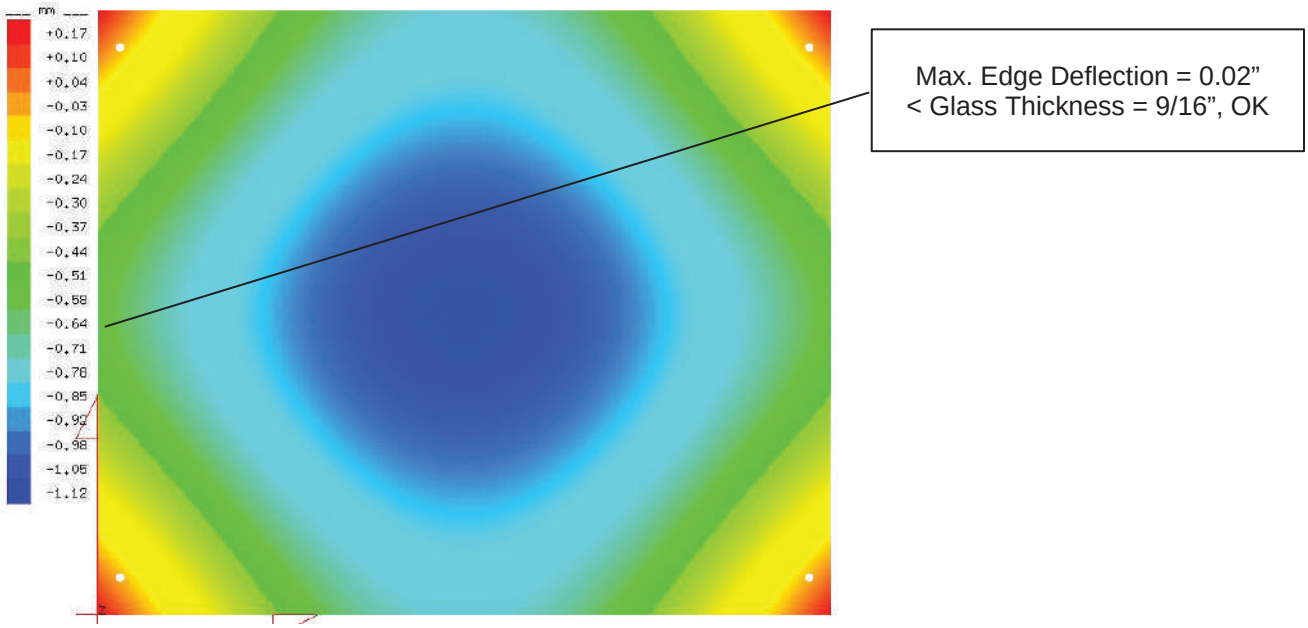

Load Case: DL + LL

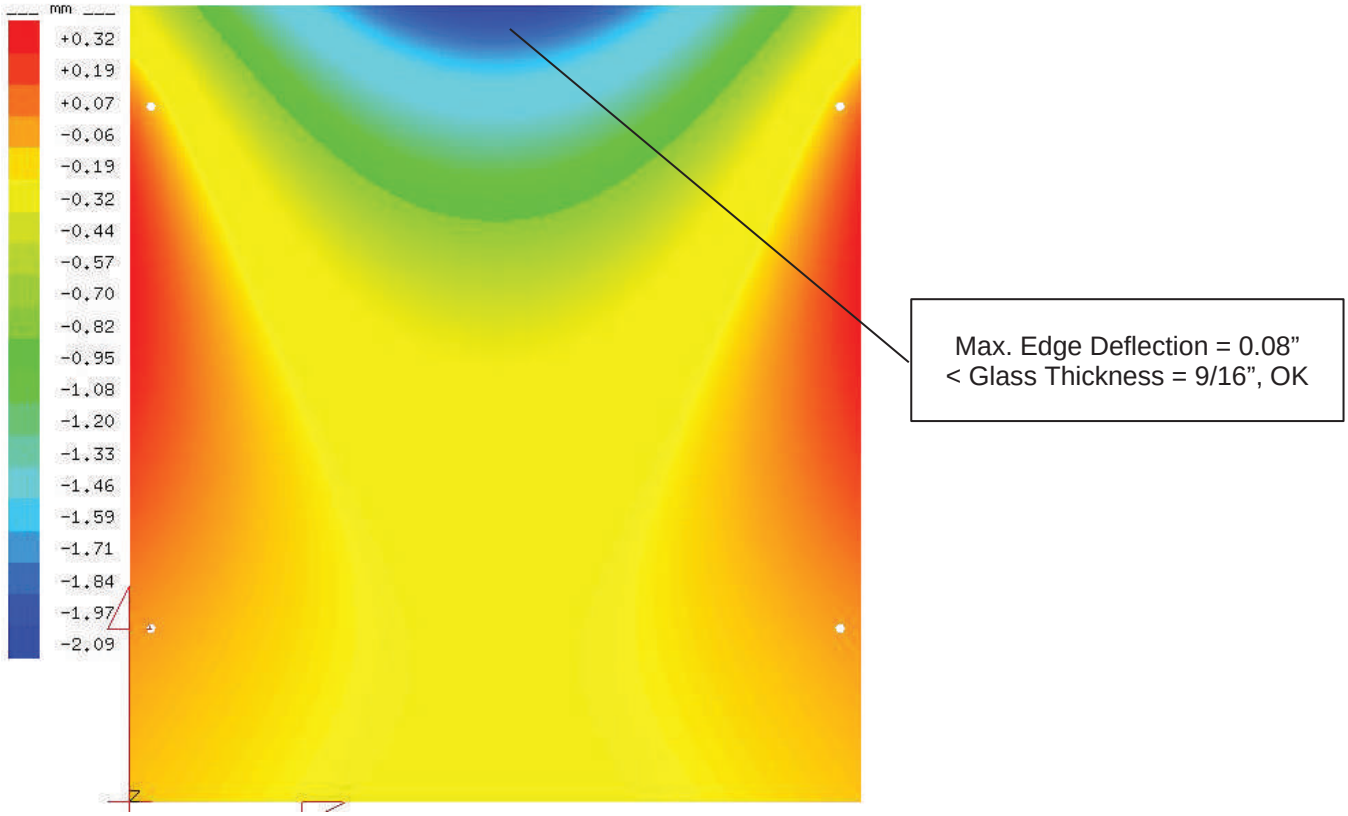

Load Case: DL + LL

© 2019 R&B Wagner, Inc. All Rights Reserved.
WagnerArchitectural.com

7.5. Glass Panel – Flat Clip Series

7.5.1. Glass Panel Dimensions

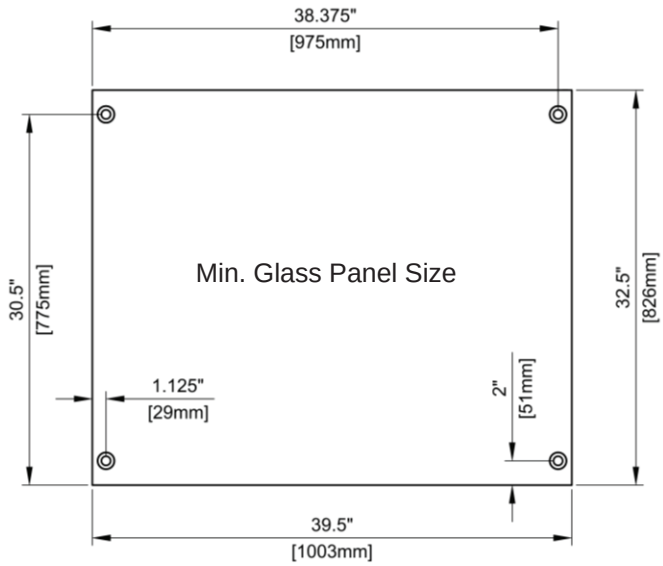

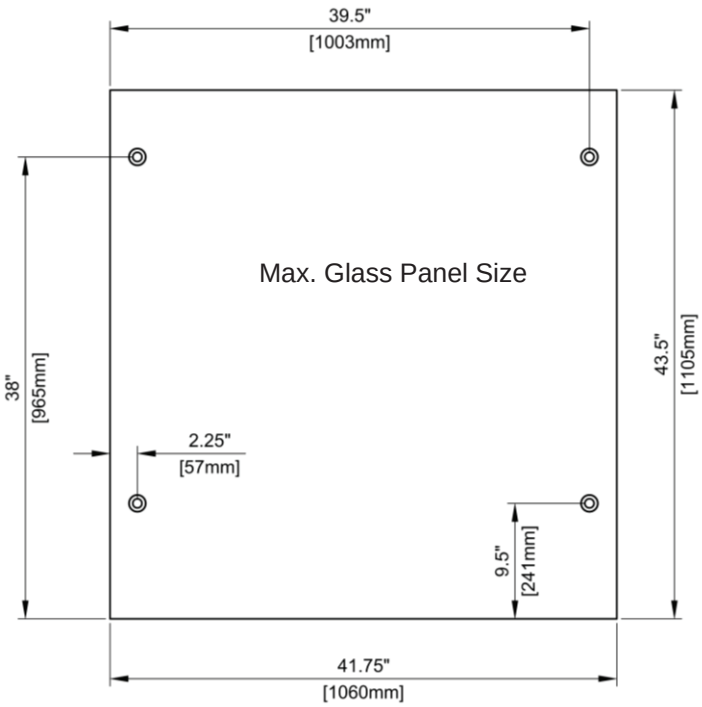

Min. Glass Panel Dimensions (W x H) = 39-1/2” x 32-1/2”.

Max. Glass Panel Dimensions (W x H) = 41-3/4” x 43-1/2”.

Max. and Min. glass dimensions create a design envelope to which the glass analysis applies. They do not guarantee that every glass panel size within these boundaries will fit into the railing system. Follow the applicable railing glass size guideline and standards and consult with the glass manufacturer for manufacturing tolerances.

7.5.2. Glass Composition

4.) 1/4” Fully Tempered Glass
5.) 0.06” SG Interlayer
6.) 1/4” Fully Tempered Glass

Note: Min. glass infill panel nominal thickness = 9/16”. Max. glass infill panel nominal thickness = 11/16”

All glass panels to be fully tempered and laminated with SG interlayer.

7.5.3. Glass Loads

PL = 5psf
LL = 50plf (for deflection purposes only)
LLc = 50lbf

Note: Glass panels are analyzed for all applicable load combinations. Only the governing load combination is shown in the result section.

© 2019 R&B Wagner, Inc. All Rights Reserved.
WagnerArchitectural.com

7.5.4. Stress Utilization

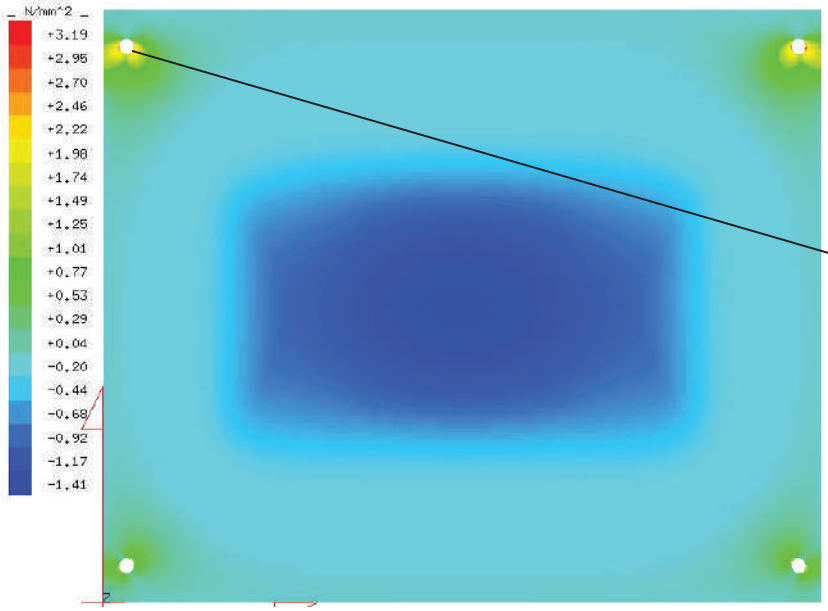

Max. Principal Stress = 3.19 MPa = 463 psi < Allowable Stress = 6,000psi OK

Load Case: DL + LLc

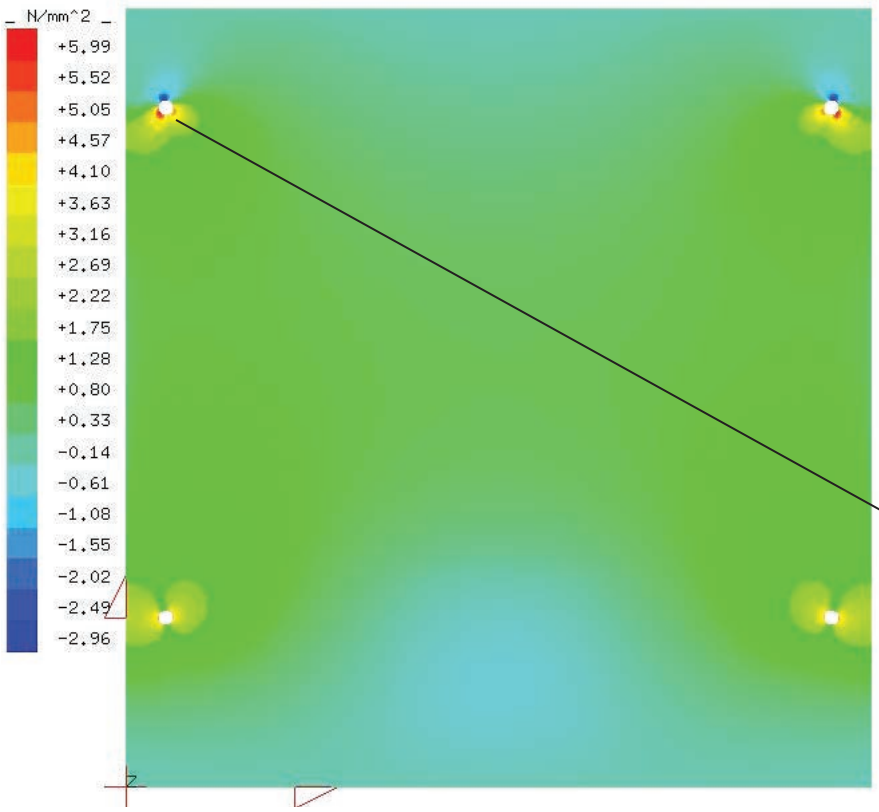

Max. Principal Stress = 5.99 MPa = 870 psi < Allowable Stress = 6,000psi OK

Load Case: DL + LLc

© 2019 R&B Wagner, Inc. All Rights Reserved.
WagnerArchitectural.com

7.5.5. Deflection Utilization

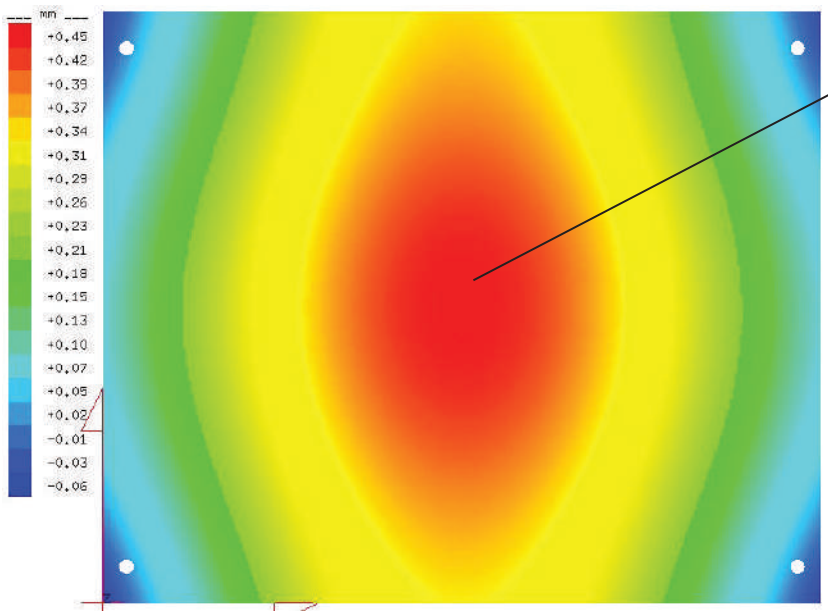

Max. Deflection = 0.02” < L/50 = 0.73” OK

Load Case: DL + LLc

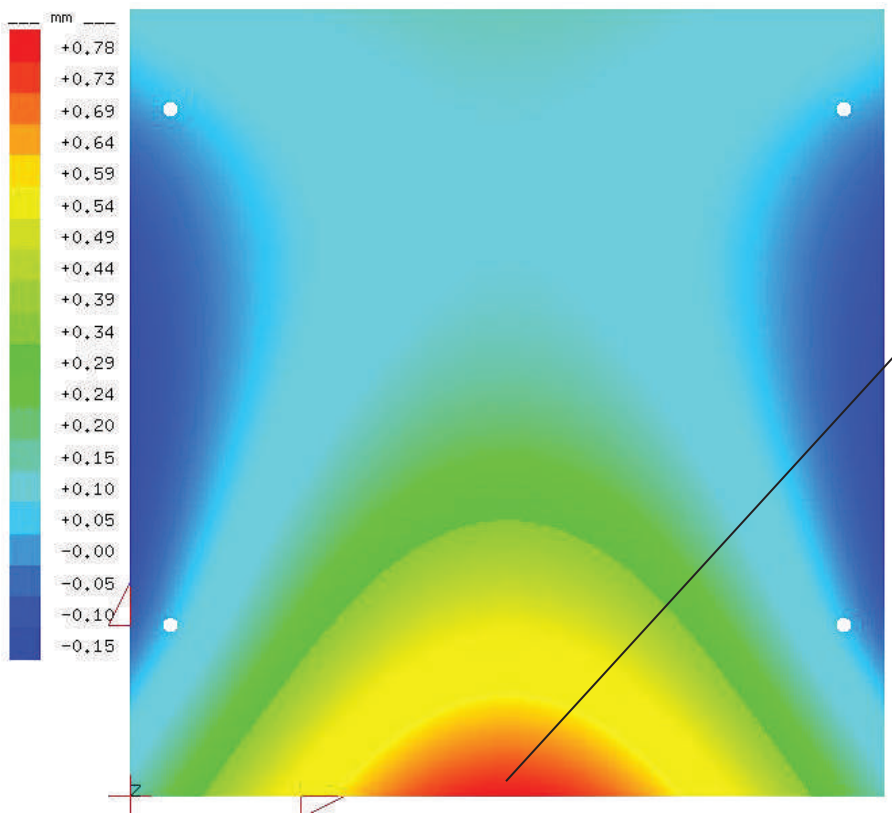

Max. Deflection = 0.03” < L/50 = 0.73” OK

Load Case: DL + LLc

© 2019 R&B Wagner, Inc. All Rights Reserved.
WagnerArchitectural.com

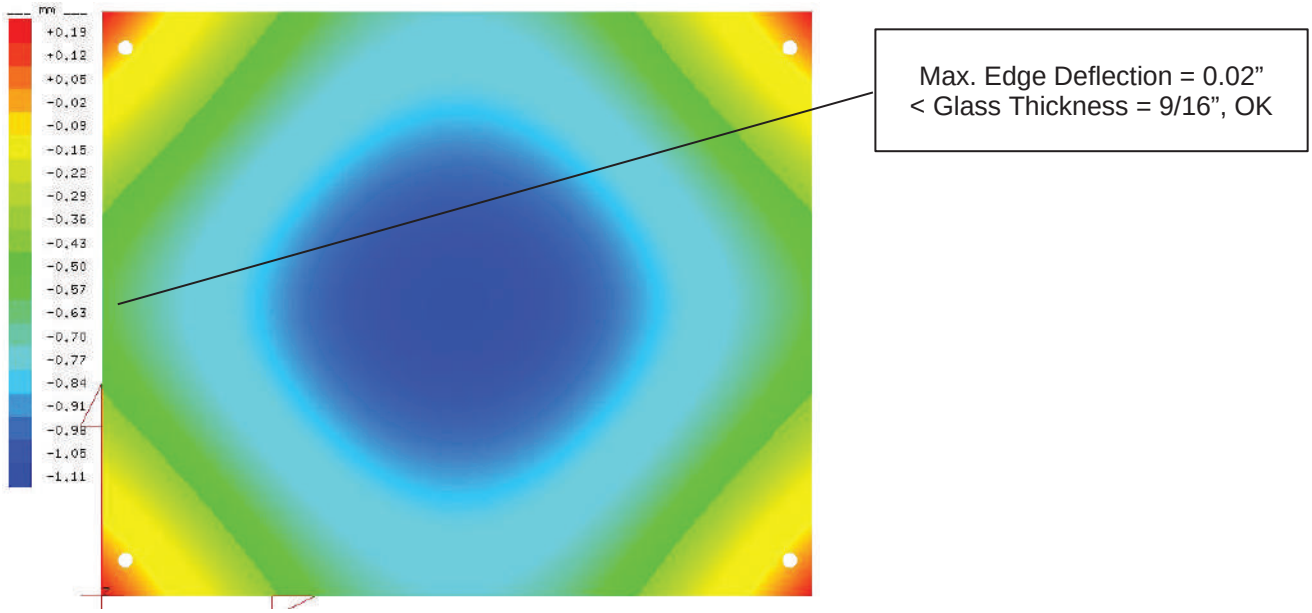

Load Case: DL + LL

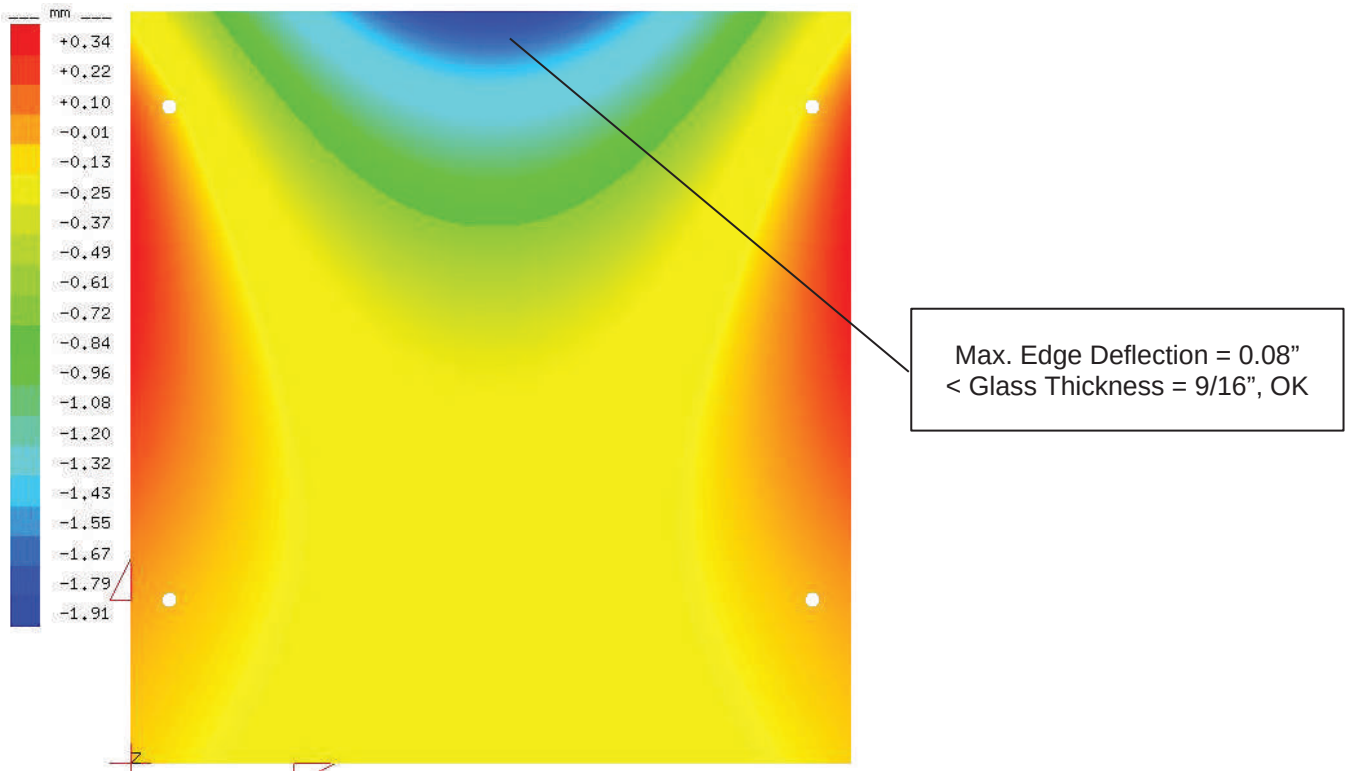

Load Case: DL + LL

© 2019 R&B Wagner, Inc. All Rights Reserved.
WagnerArchitectural.com

7.6. Glass Panel – Spider Clip Series

7.6.1. Glass Panel Dimensions

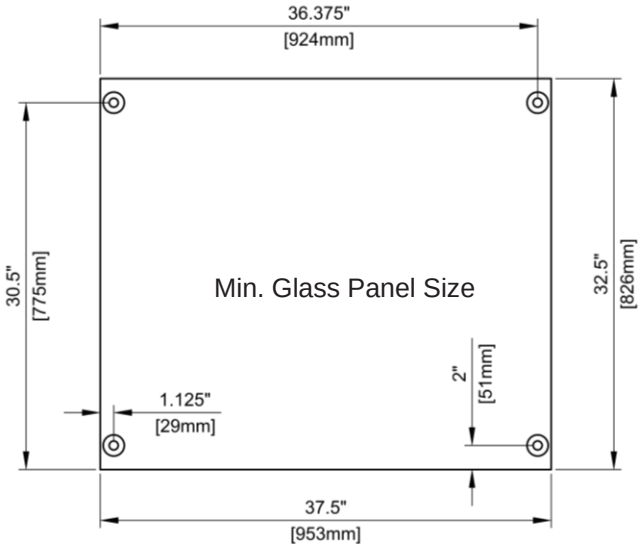

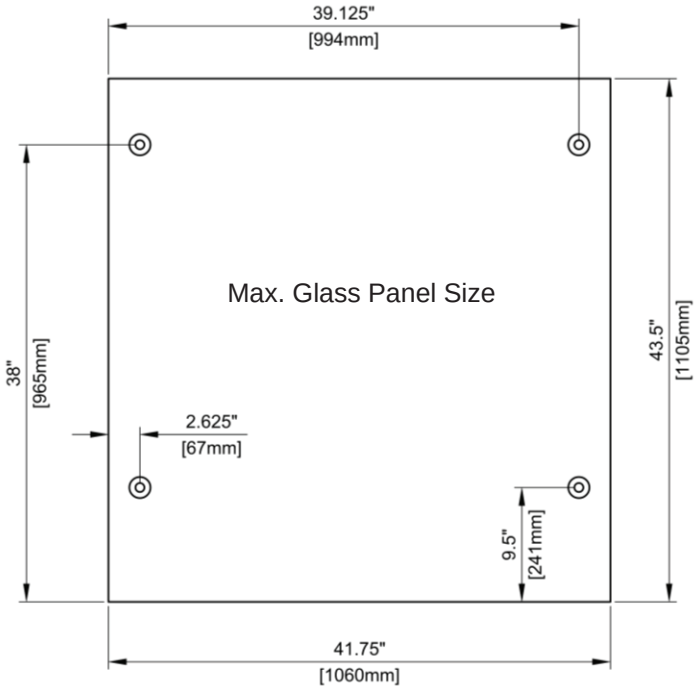

Min. Glass Panel Dimensions (W x H) = 37-1/2” x 32-1/2”.

Max. Glass Panel Dimensions (W x H) = 41-3/4” x 43-1/2”.

Max. and Min. glass dimensions create a design envelope to which the glass analysis applies. They do not guarantee that every glass panel size within these boundaries will fit into the railing system. Follow the applicable railing glass size guideline and standards and consult with the glass manufacturer for manufacturing tolerances.

7.6.2. Glass Composition

7.) 1/4” Fully Tempered Glass
8.) 0.06” SG Interlayer
9.) 1/4” Fully Tempered Glass

Note: Min. glass infill panel nominal thickness = 9/16”. Max. glass infill panel nominal thickness = 11/16”

All glass panels to be fully tempered and laminated with SG interlayer.

7.6.3. Glass Loads

PL = 5psf
LL = 50plf (for deflection purposes only)
LLc = 50lbf

Note: Glass panels are analyzed for all applicable load combinations. Only the governing load combination is shown in the result section.

© 2019 R&B Wagner, Inc. All Rights Reserved.
WagnerArchitectural.com

7.6.4. Stress Utilization

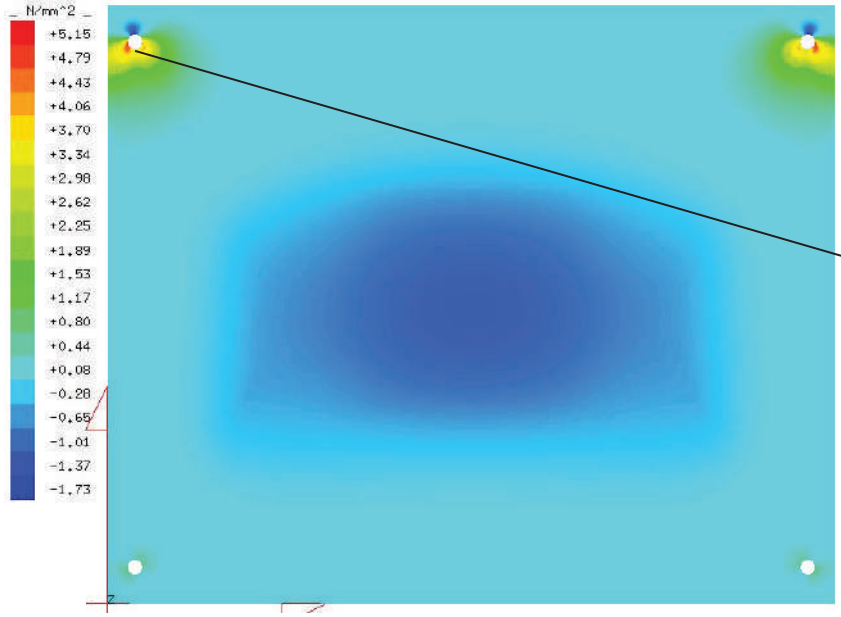

Max. Principal Stress = 5.15 MPa = 750 psi < Allowable Stress = 6,000psi OK

Load Case: DL + LLc

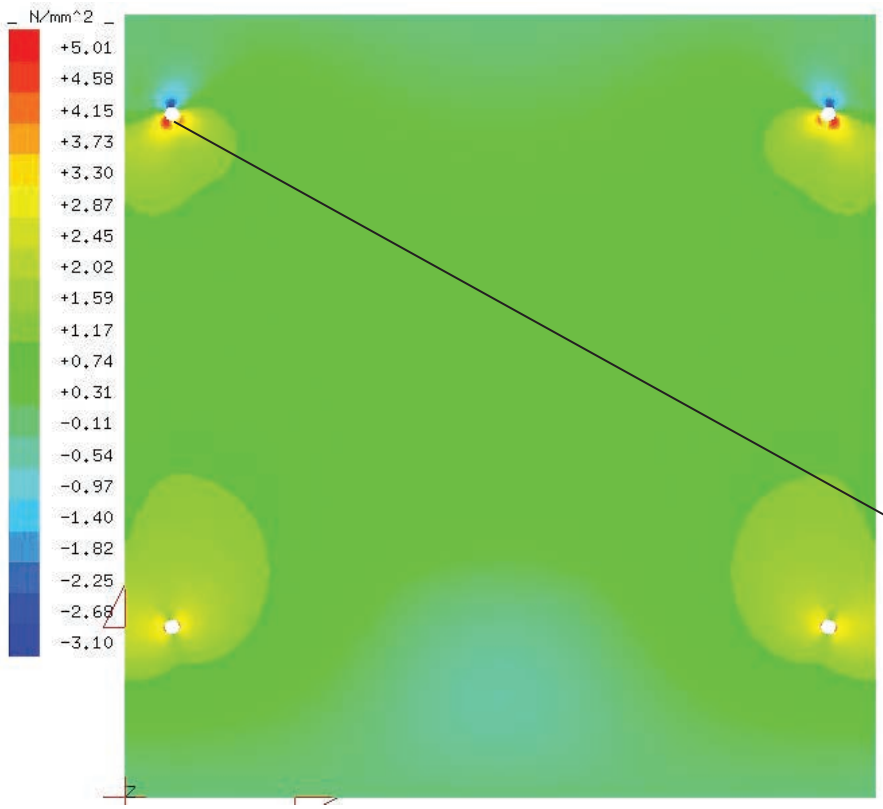

Max. Principal Stress = 5.01 MPa = 730 psi < Allowable Stress = 6,000psi OK

Load Case: DL + LLc

© 2019 R&B Wagner, Inc. All Rights Reserved.
WagnerArchitectural.com

7.6.5. Deflection Utilization

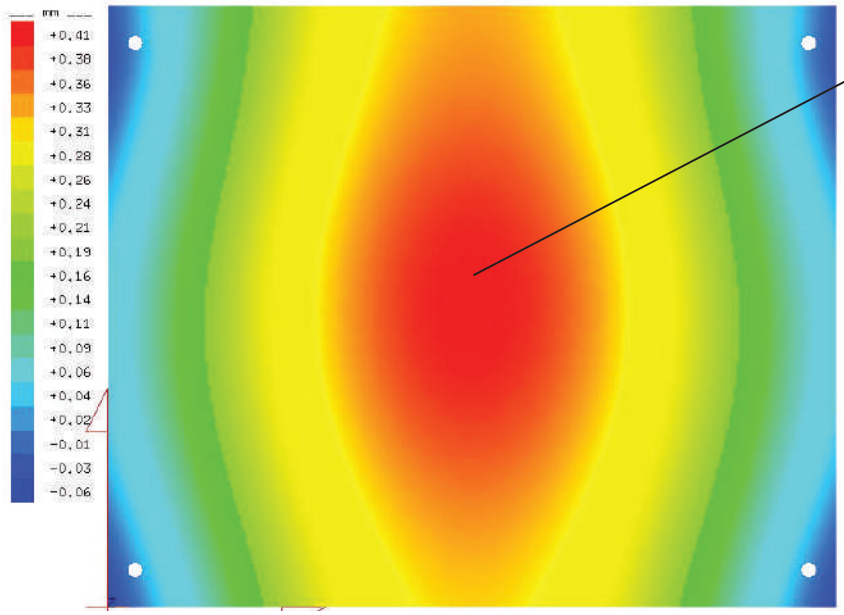

Max. Deflection = 0.02” < L/50 = 0.73” OK

Load Case: DL + LLc

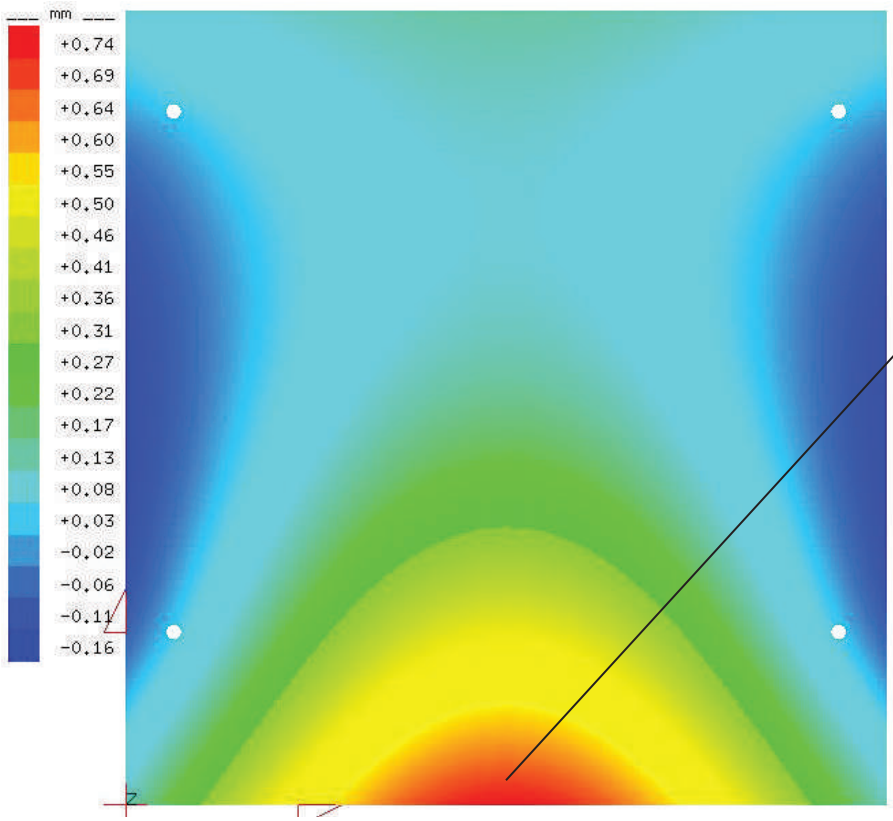

Max. Deflection = 0.03” < L/50 = 0.73” OK

Load Case: DL + LLc

© 2019 R&B Wagner, Inc. All Rights Reserved.
WagnerArchitectural.com

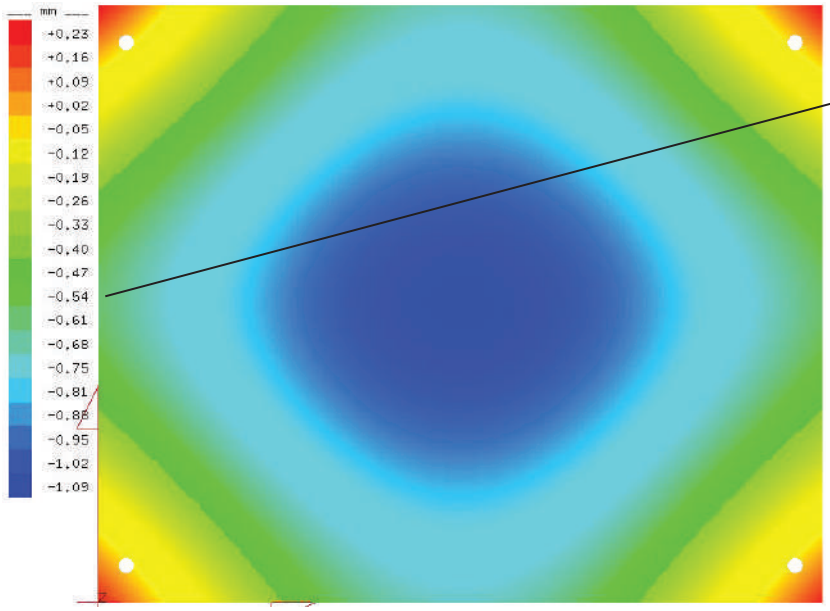

Max. Edge Deflection = 0.02”
< Glass Thickness = 9/16”, OK

Load Case: DL + LL

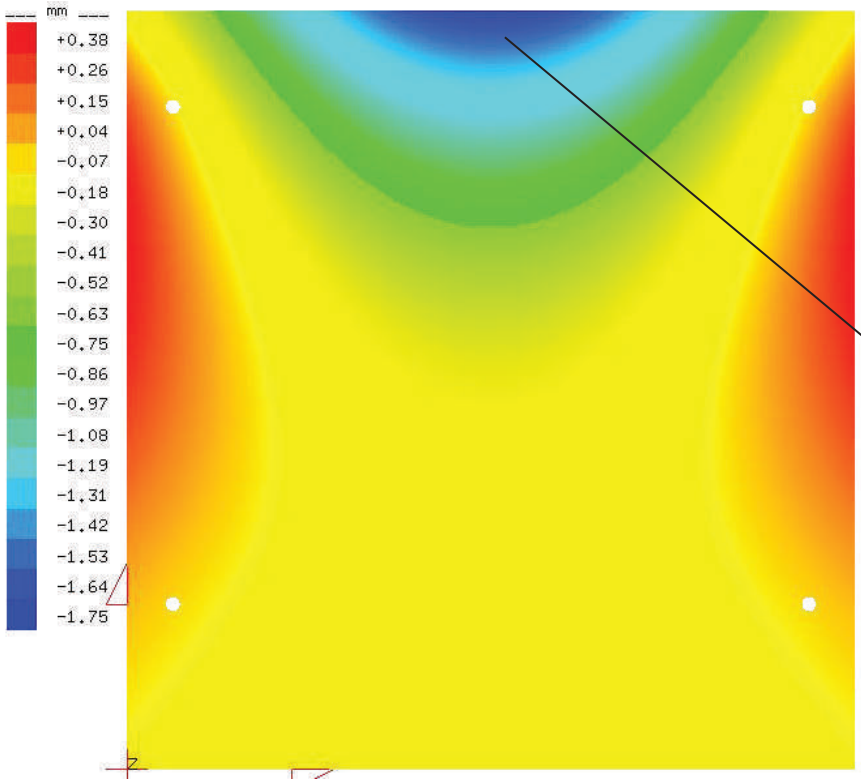

Max. Edge Deflection = 0.07”
< Glass Thickness = 9/16”, OK

Load Case: DL + LL

© 2019 R&B Wagner, Inc. All Rights Reserved.
WagnerArchitectural.com

8. Appendix I – Technical Data

8.1. Test Report P18-0055C

ANDERSON LABORATORIES, INC.
Specialists in Materials Evaluation

HEAVY DUTY WELD FLANGE (1623HD/1623HD-S) TEST REPORT
Report Date: January 18, 2018

Project Number: P18-0055C
Supplement to Project Numbers P18-0055, P18-0055A and P18-0055B

Client: R & B Wagner, Inc. R313
10600 West Brown Deer Road
Milwaukee, WI 53224

Objective
Witness load testing of a statistical sample of R&B Wagner's Heavy-Duty Weld Flange Part Number 1623HD (Drawing "A", Image #1) performed as described in Section 4.5.1 of ASCE 7 in accordance with the International Building Code - Structural Design clause 1607.8.1, report tests outcome, and certify the Weld Flange's functional performance against the stated standards.

Test Conditions and Materials

Test Date: January 10, 2018.

Test Location: The witnessing took place at the R & B Wagner, Inc. facility at 10600 West Brown Deer Road, Milwaukee, WI

Test Materials: Three (3) each of a single baluster (Drawing "B" and Images #4 & #5)
Three (3) each of a rail assembly (Drawing "D", Image #2)

The single baluster assemblies (EXP373, Drawing "B") were comprised of 45" tall by 1.90" OD schedule-#40 316 stainless steel pipe and (1) heavy duty weld flange (part number 1623HD, EXP373, Drawing "A"). The flange was welded to the pipe with a 1/4" continuous fillet weld around the top and bottom. The flange was mounted to the substrate with 3/8" steel bolts.

The rail assemblies (EXP375, Drawing "C") were comprised of (2) balusters constructed as described previously with welded on post tops (LU31904PTAA, EXP375, Drawing "B"), post top cap rail mounting clips (LULSBC75, EXP375, Drawing "B"), and a 60" length of 1.66" stainless steel cap rail (793-0391-02, EXP375, Drawing "B"). The flanges were mounted to the substrate with 3/8" steel bolts.

Loading Equipment: Omega load cell, model LC101/DP25B-S
(Calibration certification 1002032020*)

Measuring Equipment: Measurement Specialties string encoder, PT1A-25-FR-10K-C25
(Calibration certification 1002032022*)

* All calibration records were current (Appendix A)

Procedures and Data

Single balusters were load tested with the load applied 42" above the mounting substrate (Image #4 and #5). The baluster was loaded using a manual hydraulic cylinder with the load cell in the loading chain. The displacement was measured with a spring-loaded string encoder attached opposite the loading point. Loading was applied according to Section 4.5.1 of ASCE 7. Each baluster was loaded to an excess of 500 pounds. The test was run independently on each of the 3 test balusters. The load and displacement reading results appear in Appendix C of this report.

Rail assemblies were side loaded at the midpoint of the cap rail, 30" from either of the balusters and 42" above the mounting substrate. The rail assembly was loaded using a manual hydraulic cylinder with the load cell in the loading chain. The displacement was measured with a spring-loaded string encoder attached opposite the loading point. Loading was applied according to Section 4.5.1 of ASCE 7. Each rail assembly was loaded to an excess of 625 pounds. The test was run independently on each of the 3 test rail assemblies. The load and displacement reading results appear in Appendix C of this report.

Results

After each single baluster 500 pound load test was completed, the baluster, flange, and flange weld were methodically inspected for signs of failure. The baluster itself showed significant plastic deformation, resulting in a permanent set to the baluster. The flange and flange weld exhibited no visual signs of damage or deformation.

After each rail assembly 625 pound load test was completed, the rail, balusters, flanges, and flange welds were all methodically inspected for signs of failure. The rail and the rail mounting clips showed significant plastic deformation, resulting in a permanent set. The balusters also incurred some plastic deformation and permanent set. The flanges and flange welds exhibited no visual signs of damage or deformation.

@wagnercompanies
WAGNER Architectural Systems
888-243-6914 // rfq@mailwagner.com
10600 West Brown Deer Road // Milwaukee, WI 53224, USA
© 2019 R&B Wagner, Inc. All Rights Reserved.
WagnerArchitectural.com

Conclusion

Anderson Laboratories, Inc. certifies that R&B Wagner's 1623HD heavy duty flange, when fabricated and installed as outlined within this test procedure does meet the criteria of the 2015 IBC Section 1607.8.1 when tested as outlined in Section 4.5.1 of ASCE 7. The handrail will withstand a load of 50 pounds per linear foot or a concentrated load of 200 pounds when applying a 2.5 times safety factor of safety.

Anderson Laboratories, Inc.

Rick Pearson
Mechanical Testing Group Leader
AWS Certified SCWI 10080028

@wagnercompanies

WAGNER Architectural Systems
888-243-6914 // rfq@mailwagner.com
10600 West Brown Deer Road // Milwaukee, WI 53224, USA

© 2019 R&B Wagner, Inc. All Rights Reserved.
WagnerArchitectural.com

9. Disclaimers

1.) This engineering document is NOT signed and sealed by a professional engineer. Contact Stutzki Engineering, Inc. for a project specific review if sign and seal is required as well as a list of licensed and registered states.

2.) This engineering report includes engineering only for the system and components shown in the project description. If the railing is outside the parameters of this report (including size, loading, concrete anchor spacing, etc.), it is not covered by this report and should be reviewed by a professional engineer. Contact Stutzki Engineering, Inc. if special cases must be considered.

3.) Prior to installation, all glass shall be inspected for cracks, chips and other imperfections. Any imperfection shall be grounds for inspection by the supplier. A broken lite shall be grounds for immediate replacement. The supporting system, supplied and analyzed by others, shall resist horizontal sliding and vertical separation of the glass during service loads without imposing external loads from the surrounding structure into the glass. Proper spacing shall be used for adjacent pieces of glass to allow for thermal expansion and small movements during service. Appropriate fillet radiuses shall be used at all interior corners to reduce stress concentrations.

4.) All dissimilar metals should be separated and/or protected from water and humidity. Detailing responsibility for this condition is by others.

5.) Only items within the scope of Stutzki Engineering are designed in this report. The supporting structure (including local effects at the connection interface) are designed by others and must resist the reaction loads given in this report. The stiffness of the supporting structure (analyzed by others) must not cause the handrail system to over-deflect.

6.) This document does not include Windborne-Debris-Impact Resistance design and/or certification.

7.) All laminated glass and fully tempered monolithic glass must be considered Safety Glazing per applicable building codes. Compliance with this requirement is to be done by the glass manufacture.

© 2019 R&B Wagner, Inc. All Rights Reserved.
WagnerArchitectural.com

10. Stutzki Engineering

Stutzki Engineering, Inc. is an engineering consulting firm, offering and executing engineering services for architects and building contractors in the field of structural glass, lightweight structures, and building facades. Our engineering solutions help them make their product unique.

The ideas and methods of Stutzki Engineering, Inc. are based on a long tradition of academic research and industrial development, as represented by persons like Buckminster Fuller, Frei Otto, John Argyris, Max Mengeringhausen and Herbert Klimke. The idea behind the company is to combine state of the art engineering and applied science with creative industrial design.

241 N. Broadway, Suite 302
Milwaukee, WI 53202
USA.

Phone: (414) 455-4815

http://www.stutzkiengineering.com

© 2019 R&B Wagner, Inc. All Rights Reserved.
WagnerArchitectural.com

LEGATO™
GLASS RAILING POST SYSTEM
BLADE

Application Guideline
&
Supporting Design Calculations

Prepared for Wagner Architectural Systems
By Stutzki Engineering, INC
Milwaukee, WI
Orig. Issue: January 24, 2020

888-243-6914 // rfq@mailwagner.com
10600 West Brown Deer Road // Milwaukee, WI 53224, USA

© 2019 R&B Wagner, Inc. All Rights Reserved.
WagnerArchitectural.com

Table of Contents

1. Project Description 3
2. Codes, Standards, and References 5
3. Design Loads 5
   3.1. Dead Load 5
   3.2. Interior Pressure Load 5
   3.3. Live Load 5
   3.4. Load Combinations 5
4. Railing Component Design 6
   4.1. Design Criteria 6
   4.2. Overall Geometry and Location 6
   4.3. Structural Analysis 7
   4.4. Stress Utilization 9
   4.5. Deflection Utilization 11
5. Railing Support Design 12
   5.1. Reaction Summary 12
   5.2. Design Criteria 12
   5.3. Surface Mounted Bracket Design 13
   5.4. Facia Mounted Bracket Design 23
6. Railing Connection Design 33
   6.1. Design Criteria 33
   6.2. Overall Geometry and Location 33
   6.3. Glass Clip 34
   6.4. Spider Clip 40
   6.5. Handrail Connection 49
7. Railing Glass Design 53
   7.1. General Design Criteria 53
   7.2. SG Interlayer 53
   7.3. Overall Location and Geometry 53
   7.4. Glass Panel – Glass Clip Series 54
   7.5. Glass Panel – Spider Clip Series 58
8. Disclaimers 62
9. Stutzki Engineering 63

© 2019 R&B Wagner, Inc. All Rights Reserved.
WagnerArchitectural.com

1. Project Description

This report pertains to the Wagner interior glass guardrail system – Legato Blade System. This report covers design of all handrail components that are installed in accordance with Wagner recommendations and within the defined design parameters. The scope of work includes handrail post and railing design, glass panel analysis, glass clip design, post bracket design, and anchorage design. The support structure design (steel plate or concrete slab) are outside of the scope of this report.

Design Parameters for Surface Mounted System:

Geometry:

- Height of railing above finished floor = 42”
- Max. post height = 42”
- Max. post spacing = 42”

Loads:

- Railing complies with applicable loads per 2015 IBC
- Handrail linear load = 50plf @ 42” AFF
- Handrail concentrated load = 200lbf @ 42” AFF
- Infill panel linear load = 50plf up to 42” AFF (deflection purposes only)
- Infill panel concentrated load = 50lbf over 1ft x 1ft area.

Glass:

- All glass plies to be fully tempered
- All glass panels to be laminated with SG interlayer
- Min. glass makeup = 1/4" FT glass + 0.06” SG interlayer + 1/4" FT glass
- Max. glass makeup = 5/16" FT glass + 0.06” SG interlayer + 5/16" FT glass
- Glass processing to conform with ASTM C1048, manufacturer’s processing criteria, and Wagner glass sizing recommendation

Anchors in Concrete:

- Use Hilti HUS-HR M10 anchor with 3.563” min. embedment depth
- Min. concrete strength: f’c = 4000psi @ 28 days
- Normal weight concrete
- Cracked concrete conditions
- Min. anchor edge distance = 4” (after installation)
- Min. slab thickness = 6”
- Concrete slab design is outside of the scope of this report

Anchors in Steel Plate:

- Use 1/2”-13 stainless steel bolt, condition A or better
- Bolt can be tapped or through bolt
- For tapped bolts min. steel plate strength: Fy = 36ksi, Fu = 58ksi
- For tapped bolts min. bolt thread engagement = 3/8”
- Steel plate design is outside of the scope of this report

© 2019 R&B Wagner, Inc. All Rights Reserved.
WagnerArchitectural.com

Design Parameters for Facia Mounted System:

Geometry:

- Height of railing above finished floor = 42”
- Max. post assembly height (post with bracket) = 50-1/2”
- Max. post spacing = 42”

Loads:

- Railing complies with applicable loads per 2015 IBC
- Handrail linear load = 50plf @ 42” AFF
- Handrail concentrated load = 200lbf @ 42” AFF
- Infill panel linear load = 50plf up to 42” AFF (deflection purposes only)
- Infill panel concentrated load = 50lbf over 1ft x 1ft area.

Glass:

- All glass plies to be fully tempered
- All glass panels to be laminated with SG interlayer
- Min. glass makeup = 1/4" FT glass + 0.06” SG interlayer + 1/4" FT glass
- Max. glass makeup = 5/16" FT glass + 0.06” SG interlayer + 5/16" FT glass
- Glass processing to conform with ASTM C1048, manufacturer’s processing criteria, and Wagner glass sizing recommendation

Anchors in Concrete:

- Use Hilti HUS-HR M10 anchor with 3.563” min. embedment depth
- Min. concrete strength: f’c = 4000psi @ 28 days
- Normal weight concrete
- Uncracked concrete conditions
- Min. anchor edge distance = 4” (after installation)
- Min. slab thickness = 6”
- Concrete slab design is outside of the scope of this report

Anchors in Steel Plate:

- Use 1/2”-13 stainless steel bolt, condition A or better
- Bolt can be tapped or through bolt
- For tapped bolts min. steel plate strength: Fy = 36ksi, Fu = 58ksi
- For tapped bolts min. bolt thread engagement = 3/8”
- Steel plate design is outside of the scope of this report

© 2019 R&B Wagner, Inc. All Rights Reserved.
WagnerArchitectural.com

2. Codes, Standards, and References

1) 2015 International Building Code
2) AAMA TIR A9-91 Metal Curtain Wall Fasteners
3) ACI 318–14 Building Code Requirements for Structural Concrete
4) AISC 360-10 Specification for Structural Steel Buildings and AISC 14th ed
5) AISC Design Guide 27 "Structural Stainless Steel"
6) ASCE7-10 Minimum Design Loads for Buildings and Other Structures
7) ASTM C1048 Standard Specification for Heat Treated Flat Glass
8) ASTM E1300-16 Standard Practice for Determining Load Resistance of Glass in Buildings

3. Design Loads

3.1. Dead Load

Glass = 13.2psf/in of glass x (5/16" glass + 0.06" Interlayer + 5/16" glass) = 9psf

Stainless Steel = 490pcf

3.2. Interior Pressure Load

PL = 5psf (ASD) Interior Air Pressure (2015 IBC, Section 1607.14)

3.3. Live Load

Handrail Assemblies and Guards shall be designed to resist the following loads:
Linear Live Load = 50plf at 42" above Surface (2015 IBC, Section 1607.8.1)
Concentrated Live Load = 200lbf (2015 IBC, Section 1607.8.1.1)

Other Infill Panels shall withstand the following loads:
Concentrated Live Load = 50lbf distributed over 1 sq ft (2015 IBC, Section 1607.8.1.1)

3.4. Load Combinations

1. Dead + Concentrated Live
2. Dead + Linear Live
3. Dead + Interior Air Pressure

© 2019 R&B Wagner, Inc. All Rights Reserved.
WagnerArchitectural.com

4. Railing Component Design

4.1. Design Criteria

4.1.1. Stainless Steel

316 Stainless Steel Fy = 30 ksi, min Fu = 70 ksi, min

4.1.2. Deflection Criteria

Max. Deflection = 2L/50

4.2. Overall Geometry and Location

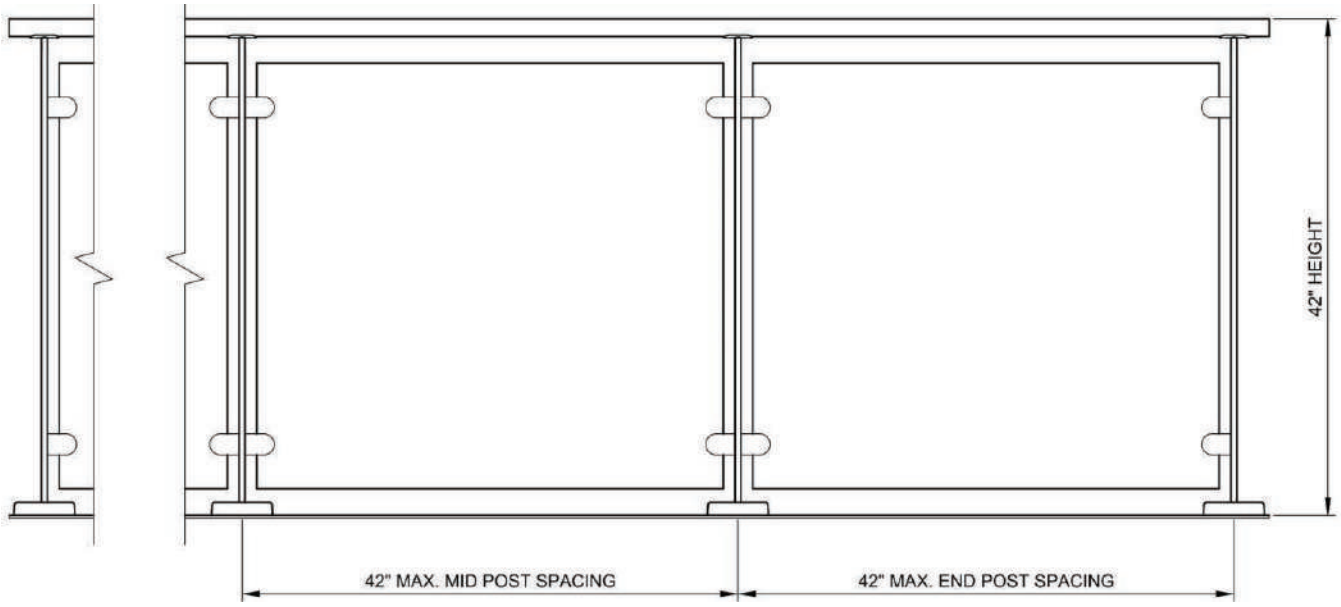

Surface Mounted System

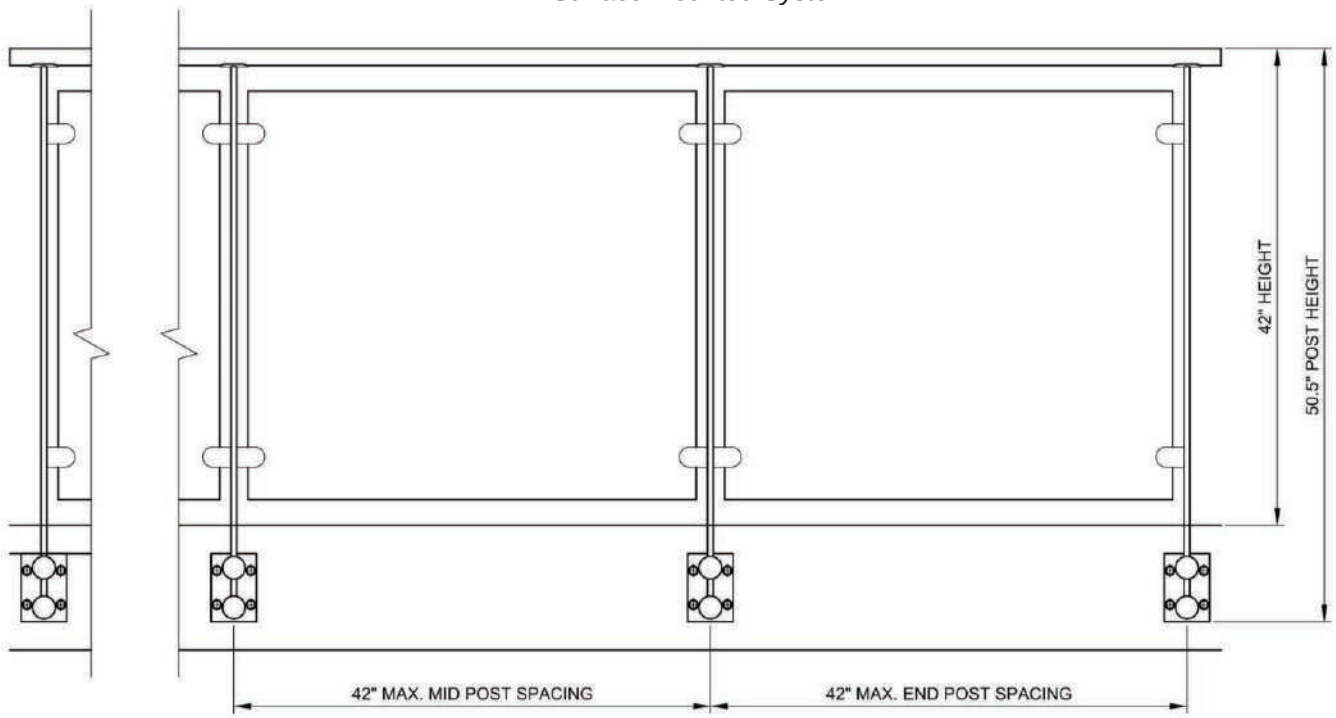

Facia Mounted System

4.3. Structural Analysis

4.3.1. Model Dimensions

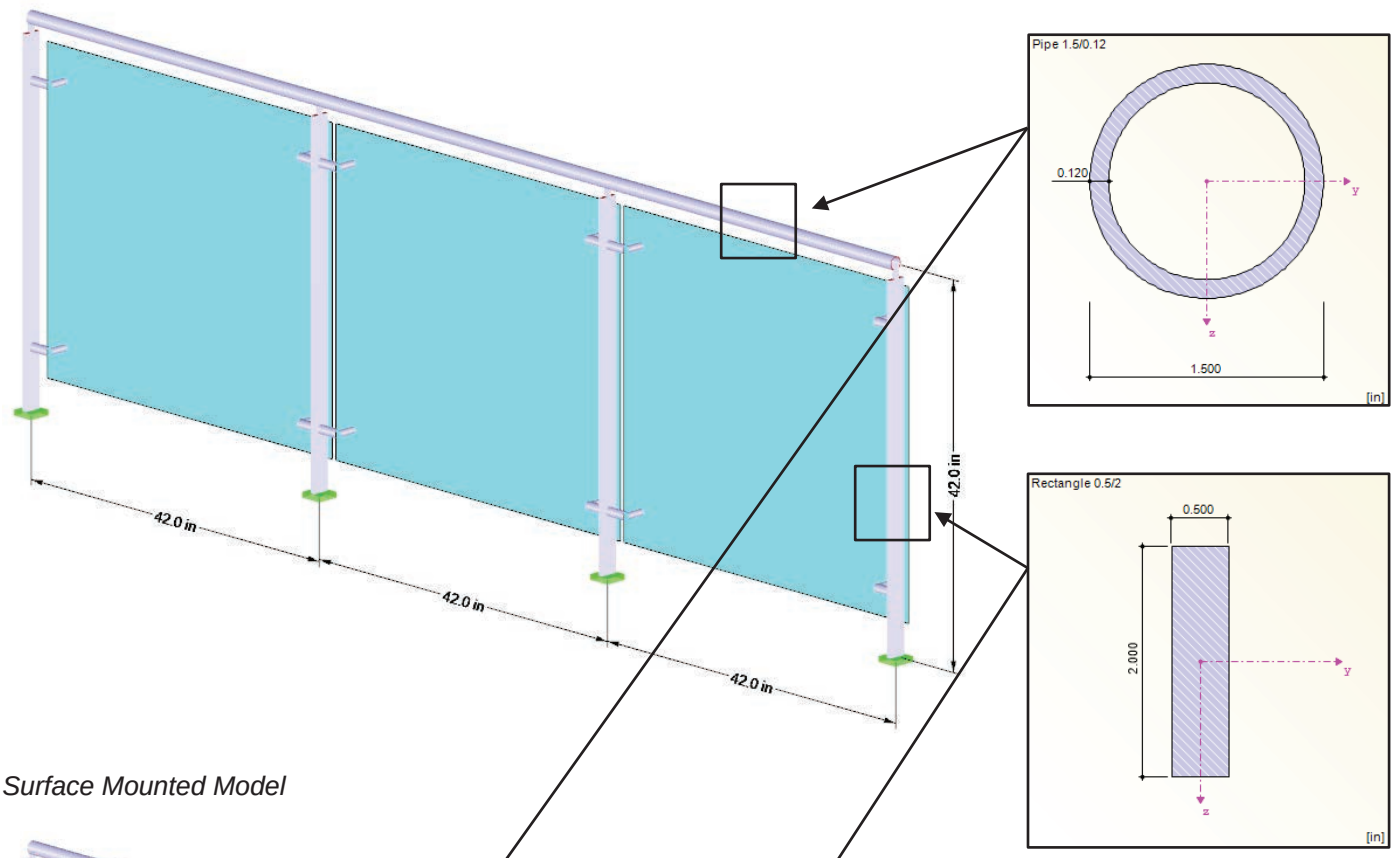

Surface Mounted Model

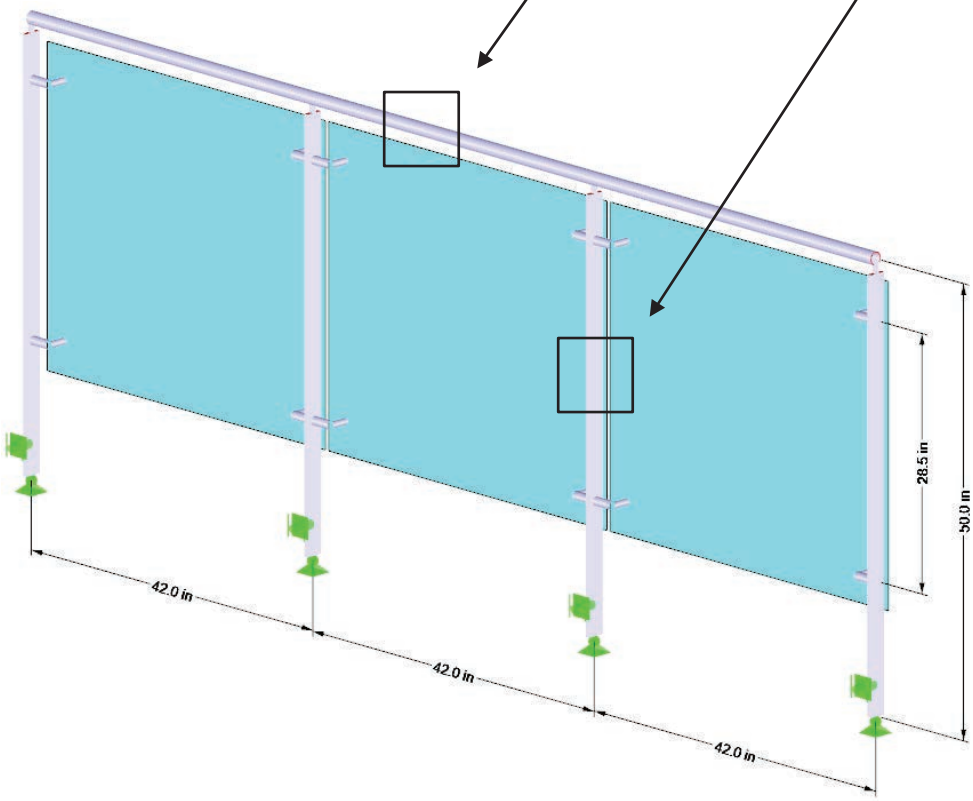

Facia Mounted Model

4.3.2. Model Loads

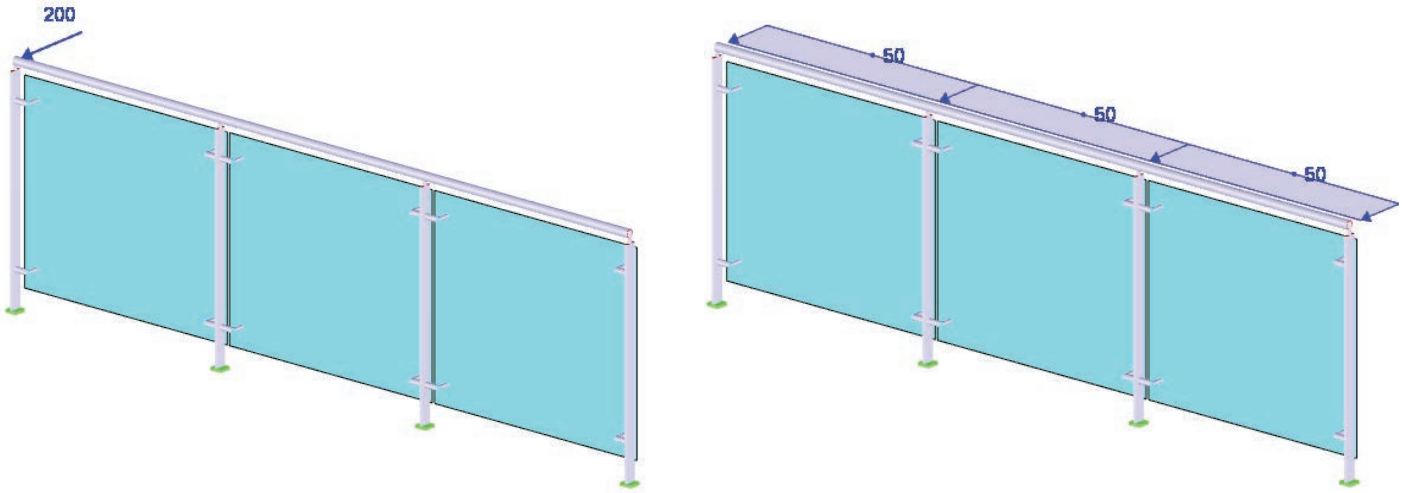

Surface Mounted Model

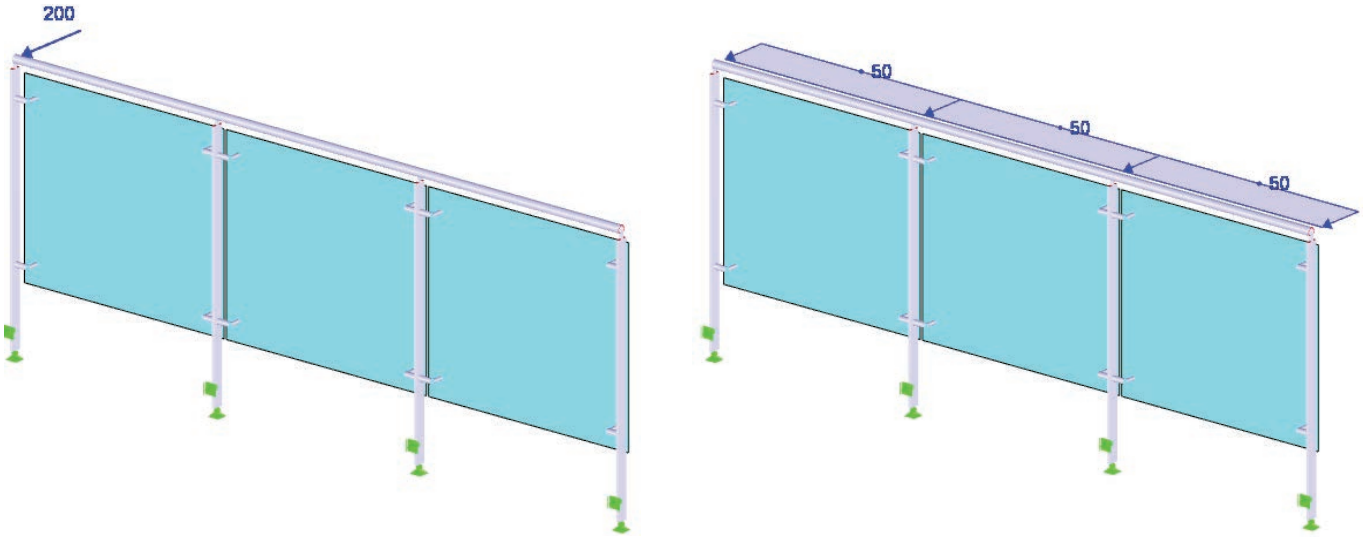

Facia Mounted Model

© 2019 R&B Wagner, Inc. All Rights Reserved.
WagnerArchitectural.com

4.4. Stress Utilization

The handrail components were analyzed per the AISC manual. The software output shows the governing envelope utilization of railing members.

4.4.1. Surface Mounted System

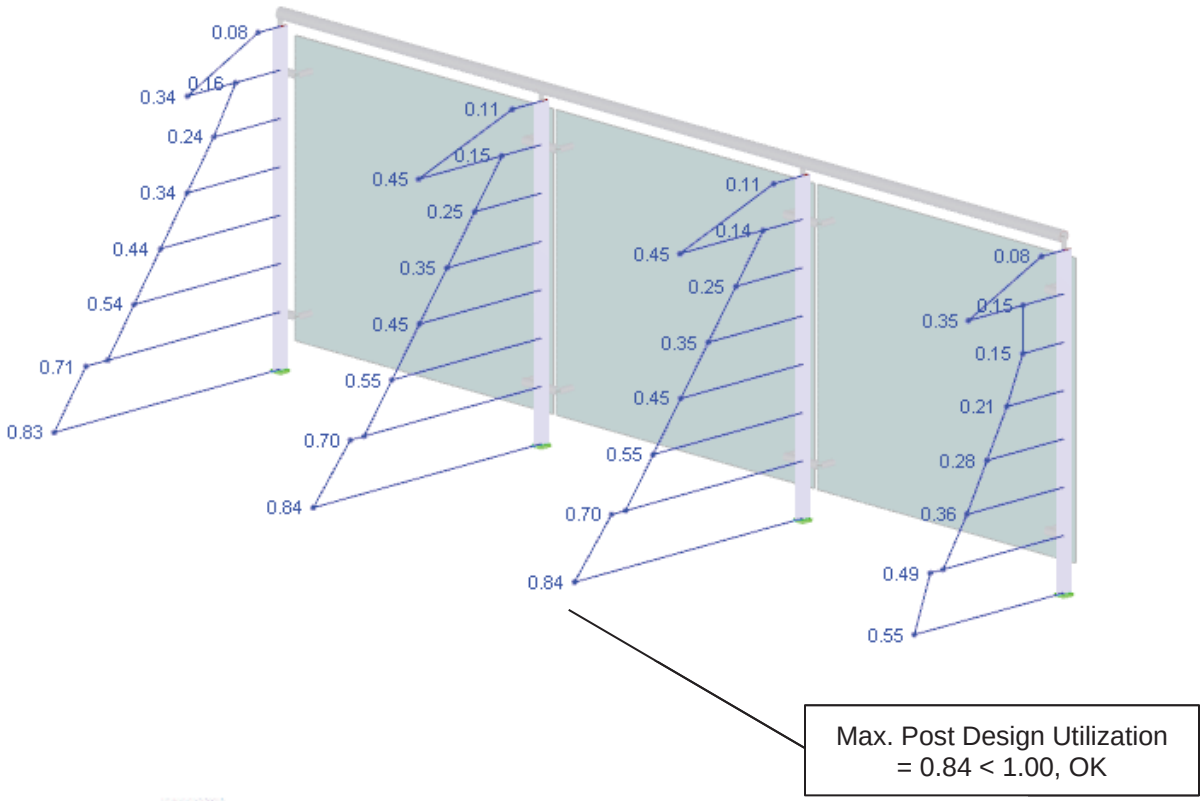

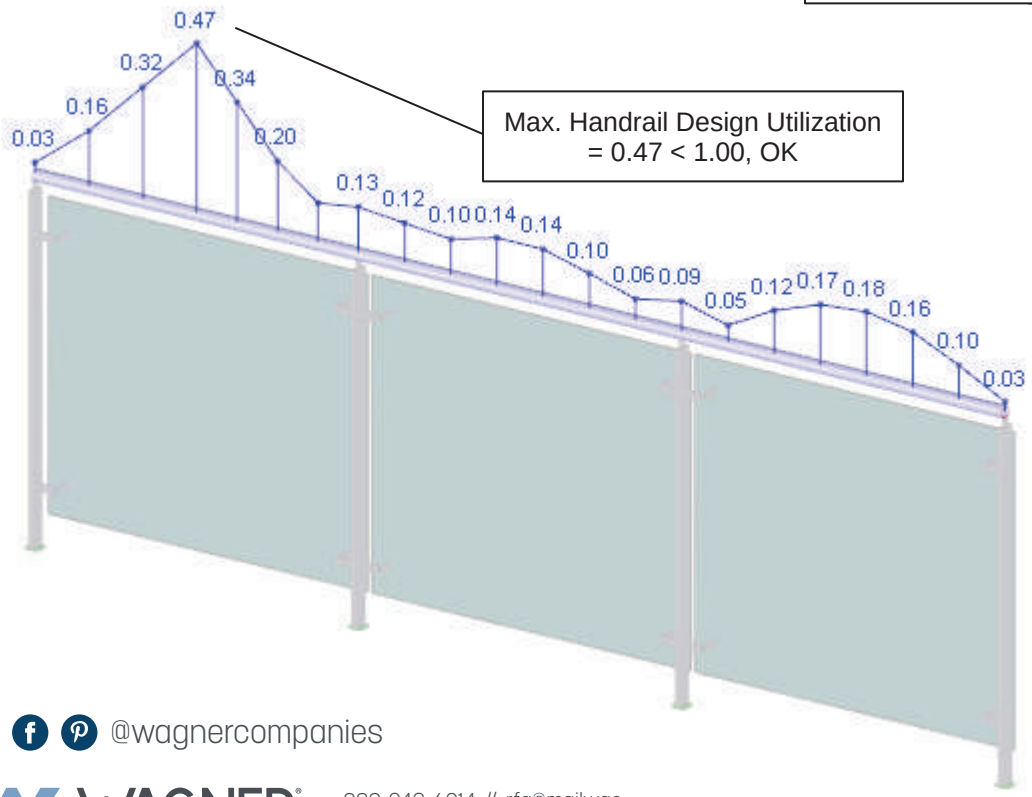

© 2019 R&B Wagner, Inc. All Rights Reserved.
WagnerArchitectural.com

4.4.2. Facia Mounted System

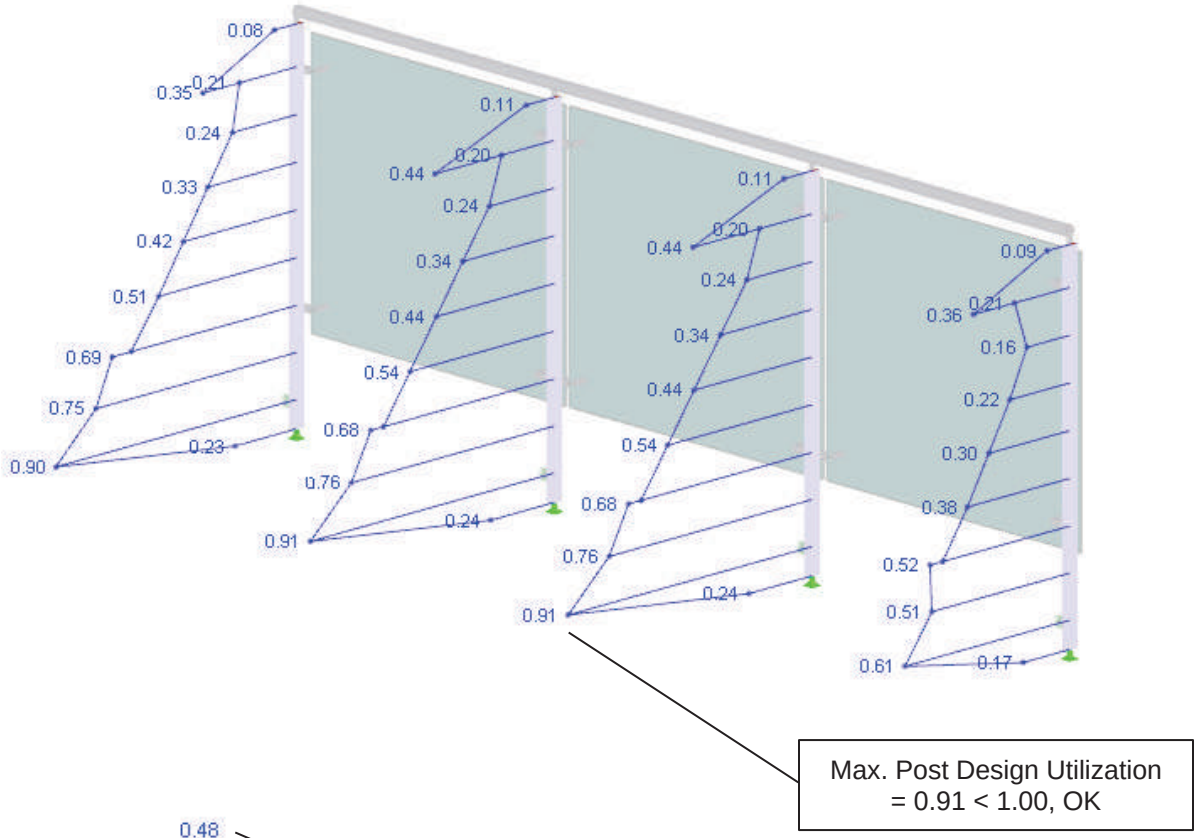

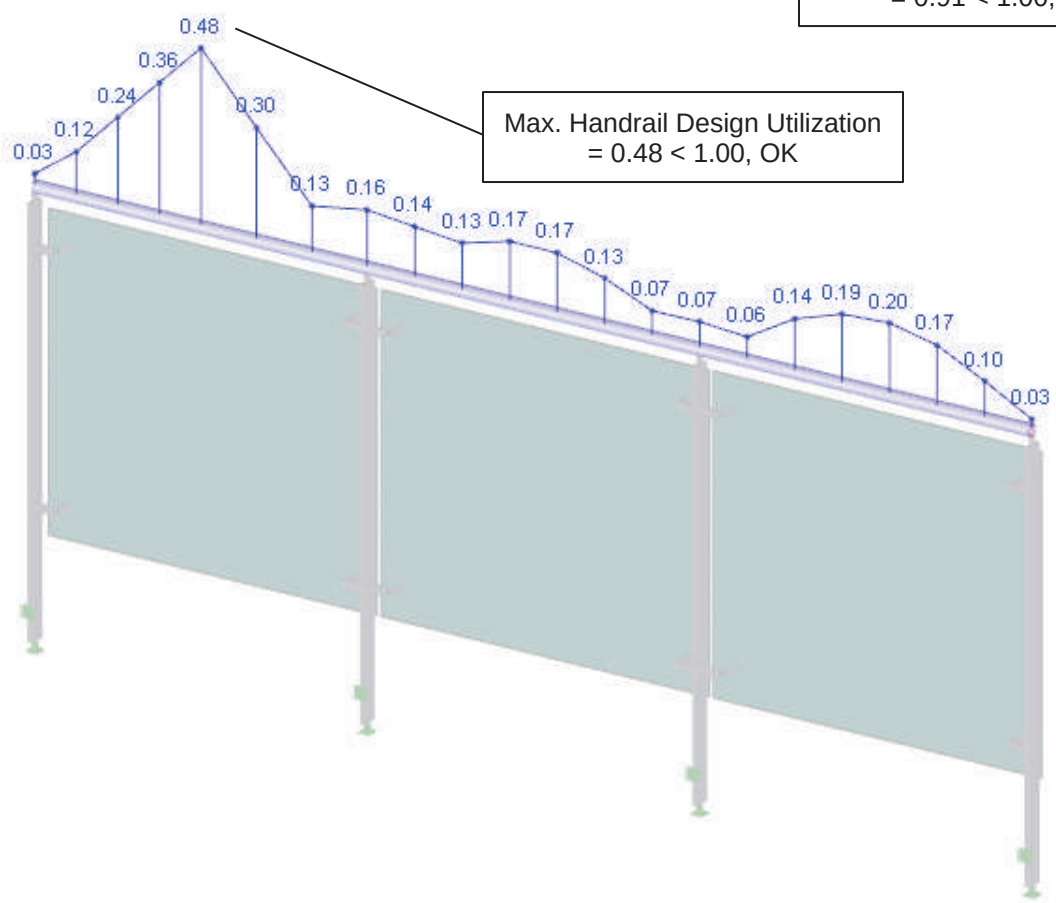

4.5. Deflection Utilization

4.5.1. Surface Mounted System

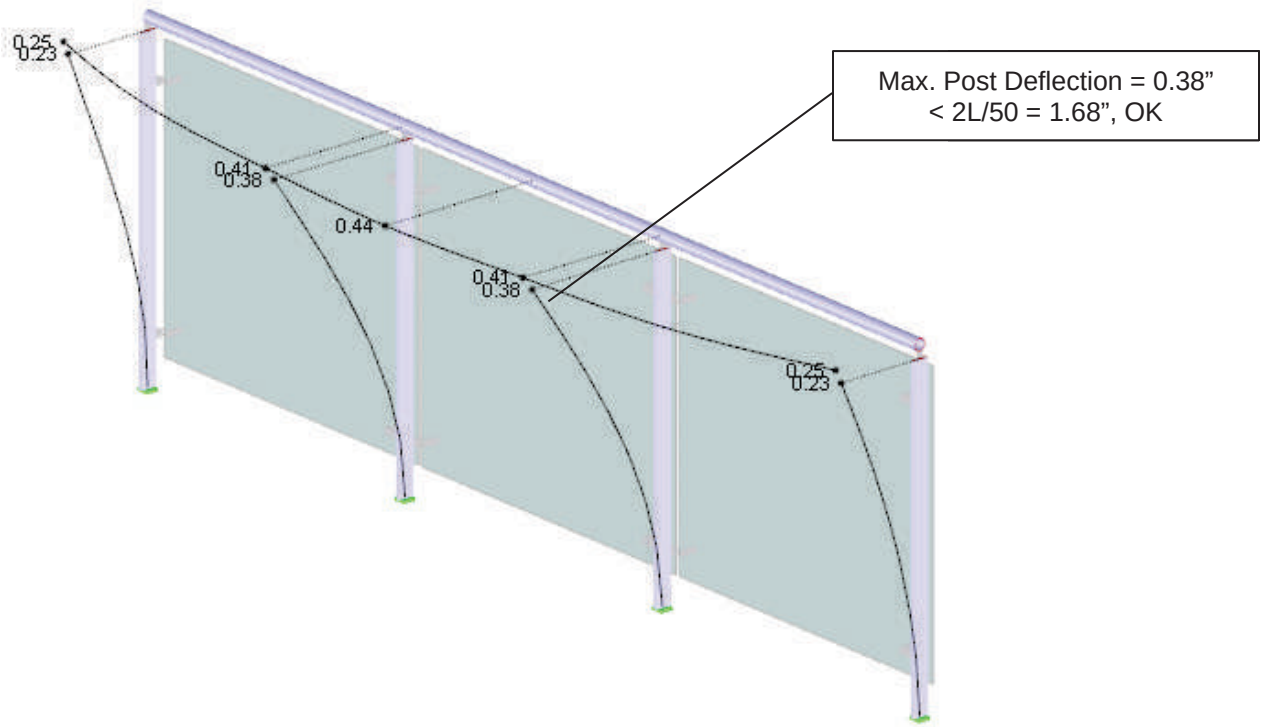

4.5.2. Facia Mounted System

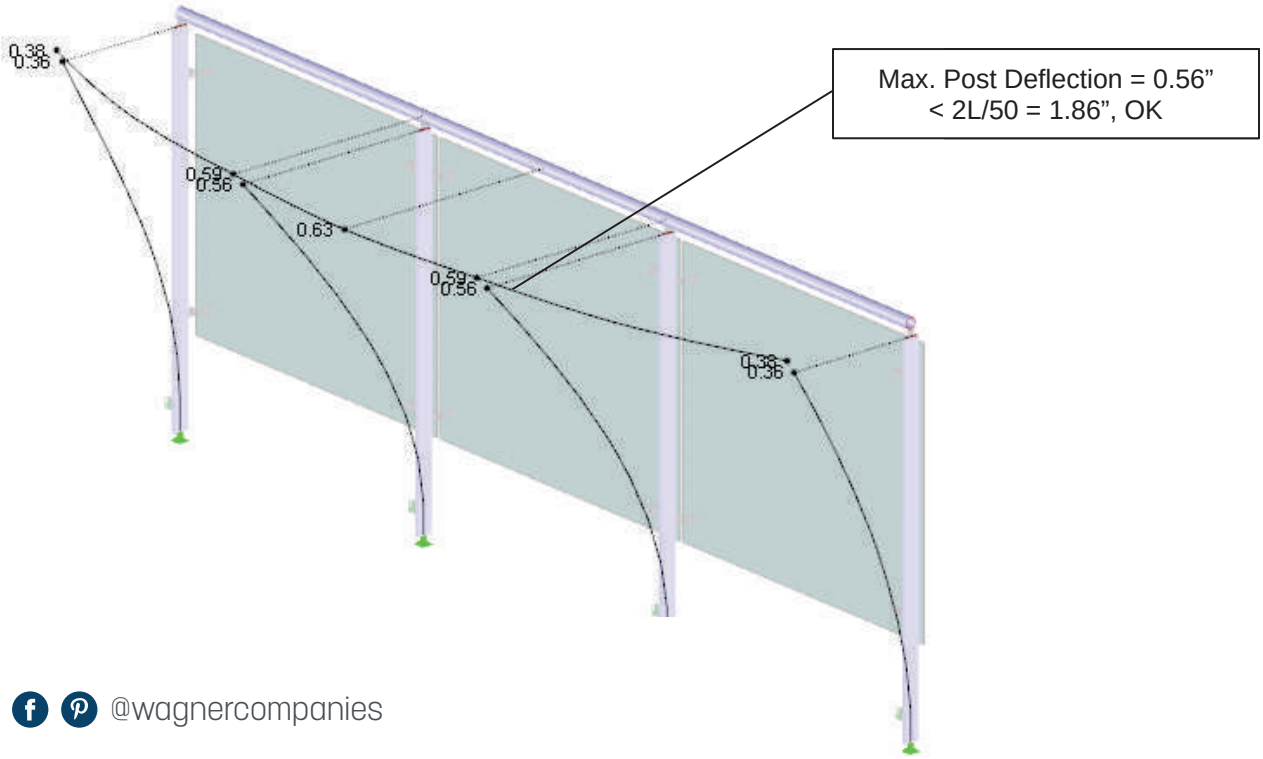

© 2019 R&B Wagner, Inc. All Rights Reserved.
WagnerArchitectural.com

5. Railing Support Design

5.1. Reaction Summary

The following forces (ASD Level) are transferred from analyzed components to the supporting structure designed by others. The supporting structure must be able to withstand these forces. This to be designed by others.

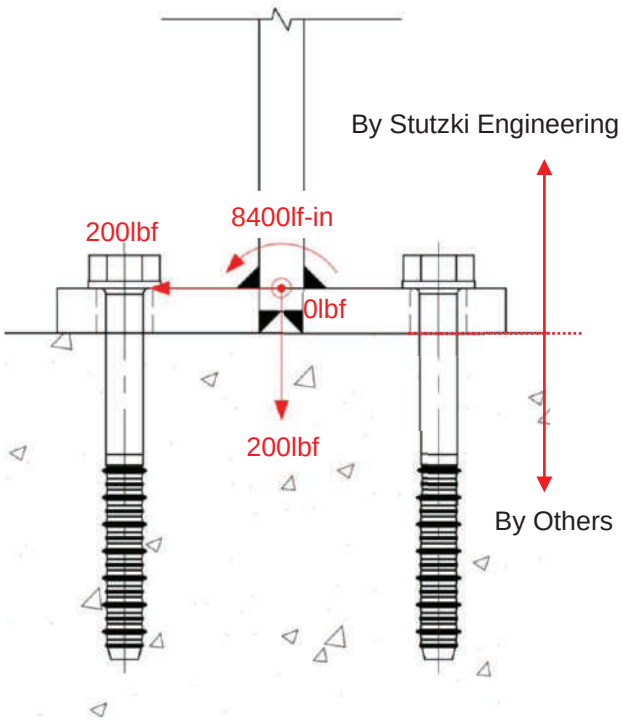

Section View through Surface Mounted Bracket

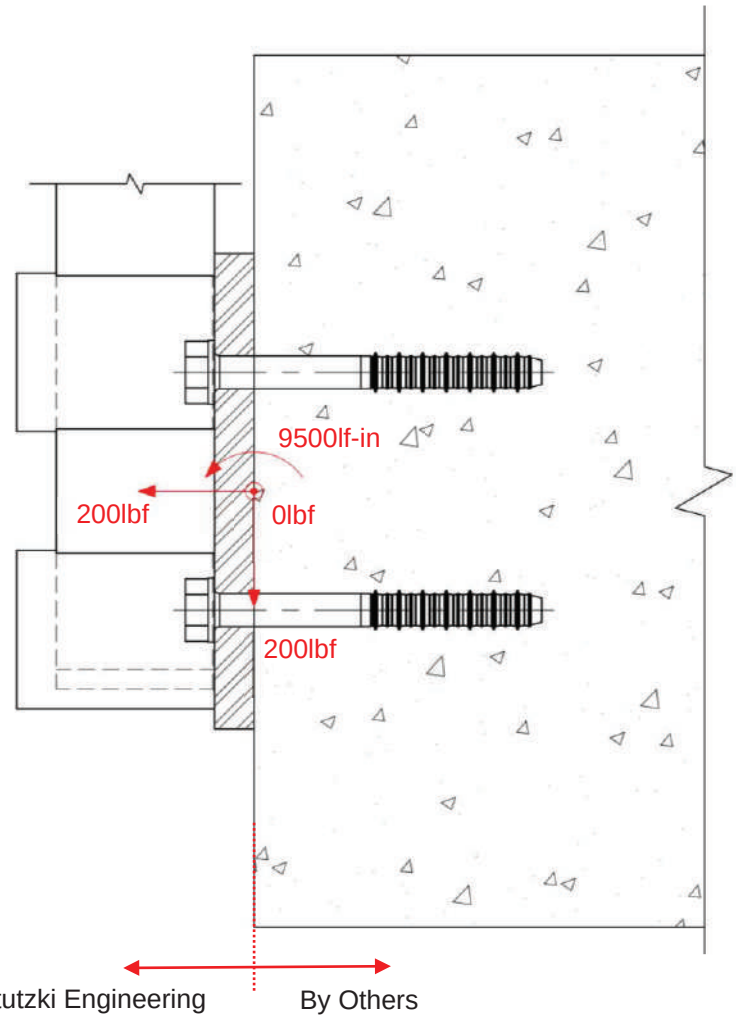

Section View through Facia Mounted Bracket

5.2. Design Criteria

5.2.1. Anchors

Hilti HUS-HR		Fu = 137.75 ksi, min

5.2.2. Concrete

Normal Weight Concrete		f'c = 4000psi @ 28 days

5.2.3. Fasteners

316 SS Bolts, Condition A	Fy = 30 ksi, min	Fu = 75 ksi, min
316 SS Bolts, Condition CW	Fy = 65 ksi, min	Fu = 100 ksi, min

5.2.4. Stainless Steel

316 SS	Fy = 30 ksi, min	Fu = 70 ksi, min

5.3. Surface Mounted Bracket Design

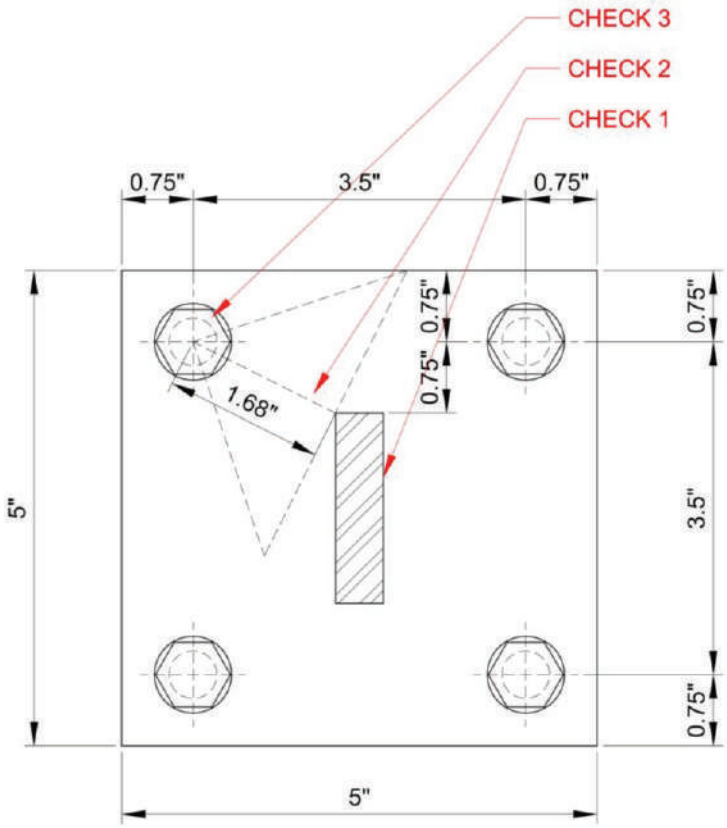

Connection Detail

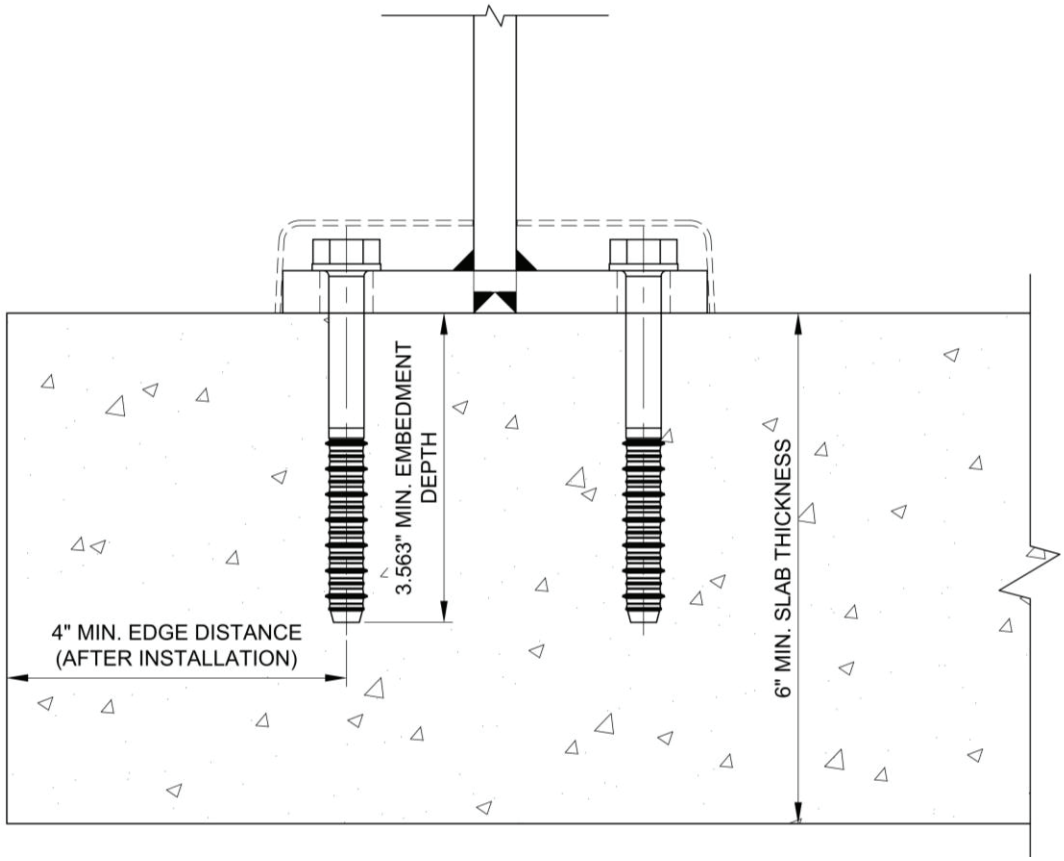

Connection Detail

Loads (ASD)

$DL := 200 \cdot lbf$ $\qquad$ $R := 200 \cdot lbf$

#1 Check 4-Sided Weld

1/4" Fillet Weld, 70ksi Min. Filler Strength, All-Around

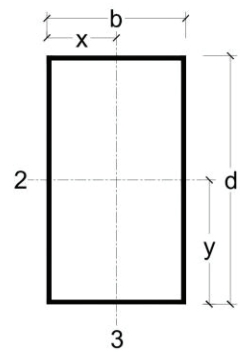

Input

$d_1 := 2.0in$ $\qquad$ $b_1 := 0.5in$

$y_1 := \frac{d_1}{2} = 1\,in$ $\qquad$ $x_1 := \frac{b_1}{2} = 0.25\,in$

Properties

$L_{1w} := 2 \cdot d_1 + 2 \cdot b_1 = 5\,in$

$S_{1w2} := \frac{d_1}{3} \cdot (3 \cdot b_1 + d_1) = 2.33\,in^2$

$S_{1w3} := \frac{b_1}{3} \cdot (3 \cdot d_1 + b_1) = 1.08\,in^2$

$J_{1w} := \frac{(b_1 + d_1)^3}{6} = 2.6\,in^3$

Forces

$N_1 := \frac{DL}{2} = 0.1 \cdot kip$ $\qquad$ $V_{1.2} := 0.0 \cdot lbf = 0 \cdot kip$ $\qquad$ $V_{1.3} := \frac{R}{2} = 0.1 \cdot kip$

$T_1 := 0 \cdot kip \cdot in = 0$ $\qquad$ $M_{1.2} := \frac{R}{2} \cdot 43 \cdot in = 4.3\,in \cdot kip$ $\qquad$ $M_{1.3} := 0 \cdot kip \cdot in$

Weld Stress

Normal Stress $\qquad$ $F_{wN} := \frac{N_1}{L_{1w}} + \frac{M_{1.2}}{S_{1w2}} + \frac{M_{1.3}}{S_{1w3}} = 1.86 \cdot \frac{kip}{in}$

Shear Stress $\qquad$ $F_{wV} := \sqrt{\left(\frac{V_{1.3}}{L_{1w}} + \frac{T_1 \cdot x_1}{J_{1w}}\right)^2 + \left(\frac{V_{1.2}}{L_{1w}} + \frac{T_1 \cdot y_1}{J_{1w}}\right)^2} = 0.02 \cdot \frac{kip}{in}$

Total Stress $\qquad$ $F_{w1} := \sqrt{F_{wN}^2 + F_{wV}^2}$ $\qquad$ $\boxed{F_{w1} = 1.86 \cdot \frac{kip}{in}}$

Capacity

Weld filler metal tensile strength $\qquad$ $F_{E1} := 70 \cdot ksi$

Effective Weld Throat $\qquad$ $E1 := \frac{\sqrt{2}}{2} \cdot \left(\frac{4}{16}\right) in = 0.18 \cdot in$ $\qquad$ $\Omega_1 := 2.7$

Allowable Stress $\qquad$ $f_{w1} := 0.6 \cdot F_{E1} \cdot E1 = 7.42 \cdot \frac{kip}{in}$ $\qquad$ $\boxed{\frac{f_{w1}}{\Omega_1} = 2.75 \cdot \frac{kip}{in}}$

Interaction

$IR1_1 := F_{w1} \div \frac{f_{w1}}{\Omega_1} = 0.68$ $\qquad$ $\boxed{CheckASD1 = \text{"OK"}}$

#2 Check Base Plate for Bending

5" x 5" x 1/2" Plate, 316 Stainless Steel

Properties:

$t_2 := 0.50 \cdot in$ $\quad b_2 := 5.0 \cdot in$ $\quad F_{y2} := 30 \cdot ksi$ $\quad Z_{w2} := 0.25 \cdot b_2 \cdot t_2^2 = 0.31\,in^3$

Force

Bolt Tension $\quad T_2 := R \cdot \frac{43 \cdot in}{3.5 \cdot in} = 2.46 \cdot kip$

Weak Axis Moment $\quad M_2 := T_2 \cdot 0.75 \cdot in = 1.84 \cdot kip \cdot in$

Capacity $\quad \Omega_2 := 1.67$

Weak Axis Moment $\quad M_{n2} := \frac{F_{y2} \cdot Z_{w2}}{\Omega_2} = 5.61\,in \cdot kip$

Interaction

$$IR1_2 := \frac{M_2}{M_{n2}} = 0.33$$

CheckASD2 = "OK"

© 2019 R&B Wagner, Inc. All Rights Reserved.
WagnerArchitectural.com

#3 Check Bolt Capacity

(4) - 1/2"-13 Bolts, 316 Stainless Steel, Condition A, Tapped in Min. 3/8" Thick A36 Plate (or Better)

Properties:

$d_{b3} := 0.50 \cdot in$ $\quad F_{y3} := 30 \cdot ksi$ $\quad F_{u3} := 75ksi$ $\quad N_3 := 13 \cdot \frac{1}{in}$

$LE_3 := 0.375 \cdot in$ $\quad F_{us3} := 58ksi$ $\quad SF_3 = 2.5$

$$F_{nt3} := \min\left(0.75 \cdot F_{y3}, \frac{1}{SF_3} \cdot F_{u3}\right) = 22.5 \cdot ksi$$

$$F_{nv3} := \min\left(0.75 \cdot F_{y3} \div \sqrt{3}, \frac{1}{SF_3} \cdot F_{u3} \div \sqrt{3}\right) = 12.99 \cdot ksi$$

$$A_{S3} := 0.7854 \cdot \left(d_{b3} - \frac{0.9743}{N_3}\right)^2 = 0.142 in^2$$

$$A_{R3} := 0.7854 \cdot \left(d_{b3} - \frac{1.2269}{N_3}\right)^2 = 0.129 in^2$$

Demand

Tension

$$T_3 := \frac{R}{2 \cdot Bolts} \cdot \frac{43 \cdot in}{3.5 \cdot in} = 1229 lbf$$

Shear

$$V_3 := \frac{R}{2} = 100 lbf$$

Capacity

Tension Capacity

$$T_{n3} := F_{nt3} \cdot A_{S3} = 3193 \cdot lbf$$

Shear Capacity

$$V_{n3} := F_{nv3} \cdot A_{R3} = 1679 lbf$$

Pull-out Capacity

$TSA_{E3} := 0.0600 \cdot in^2$ $\quad TSA_{I3} := 0.0860 \cdot in^2$

Internal Thread Capacity

Conditions = "Thick"

$$T_{I3} := \frac{LE_3 \cdot N_3 \cdot TSA_{I3} \cdot F_{us3}}{SF_3 \cdot \sqrt{3}} = 5616 lbf$$

External Thread Capacity

$$T_{E3} := \min\left(\frac{LE_3 \cdot N_3 \cdot TSA_{E3} \cdot F_{u3}}{SF_3 \cdot \sqrt{3}}, \frac{0.75 \cdot LE_3 \cdot N_3 \cdot TSA_{E3} \cdot F_{y3}}{\sqrt{3}}\right) = 3800 lbf$$

Pull-out Capacity

$$T_{outn3} := \min(T_{I3}, T_{E3}) = 3800 \cdot lbf$$

Interaction

$$IR1_3 := \left(\frac{T_3}{T_{n3}}\right)^2 + \left(\frac{V_3}{V_{n3}}\right)^2 = 0.15$$

$$IR2_3 := \left(\frac{T_3}{T_{outn3}}\right)^2 = 0.1$$

CheckASD3 = "OK"

© 2019 R&B Wagner, Inc. All Rights Reserved.
WagnerArchitectural.com

#3 Check Anchor Capacity

Hilti HUS-HR M10, SS Anchor

Demand

Anchor Group LRFD Moment $M_3 := 1.6 \cdot R \cdot 43 \cdot in = 13.76\ in \cdot kip$

Anchor Group LRFD Shear $V_3 := 1.6 \cdot R = 320\ lbf$

Anchor Capacity

Design Criteria:

- Concrete Strength f'c = 4000 psi min. @ 28 days
- Normal Weight Concrete
- 6" Slab Thickness
- 4" Min. Anchor Edge Distance (after installation tolerances)
- 3.563" Min. Embedment

Capacity is per the attached Hilti software output

© 2019 R&B Wagner, Inc. All Rights Reserved.
WagnerArchitectural.com

www.hilti.us

Profis Anchor 2.8.1

Company:	Stutzki Engineering, Inc.	Page:	1
Specifier:	JC	Project:	2018-208
Address:	241 N Broadway, Suite 302, Milwaukee, WI, 53202	Sub-Project I Pos. No.:	Legato Surface Bracket
Phone I Fax:	414-455-4815 |	Date:	5/7/2019
E-Mail:			

Specifier's comments:

1 Input data

Anchor type and diameter:	**HUS-HR M10x130**
Effective embedment depth:	$h_{ef,act}$ = 2.800 in., h_{nom} = 3.563 in.
Material:	A4
Evaluation Service Report:	Hilti Technical Data
Issued I Valid:	- | -
Proof:	Design method ACI 318-14 / Mech.
Stand-off installation:	e_b = 0.000 in. (no stand-off); t = 0.500 in.
Anchor plate:	l_x x l_y x t = 5.000 in. x 5.000 in. x 0.500 in.; (Recommended plate thickness: not calculated
Profile:	no profile
Base material:	cracked concrete, 4000, f_c' = 4,000 psi; h = 6.000 in.
Installation:	**hammer drilled hole, Installation condition: Dry**
Reinforcement:	tension: condition B, shear: condition B; no supplemental splitting reinforcement present
	edge reinforcement: none or < No. 4 bar

[R] - The anchor calculation is based on a rigid anchor plate assumption.

Geometry [in.] & Loading [lb, in.lb]

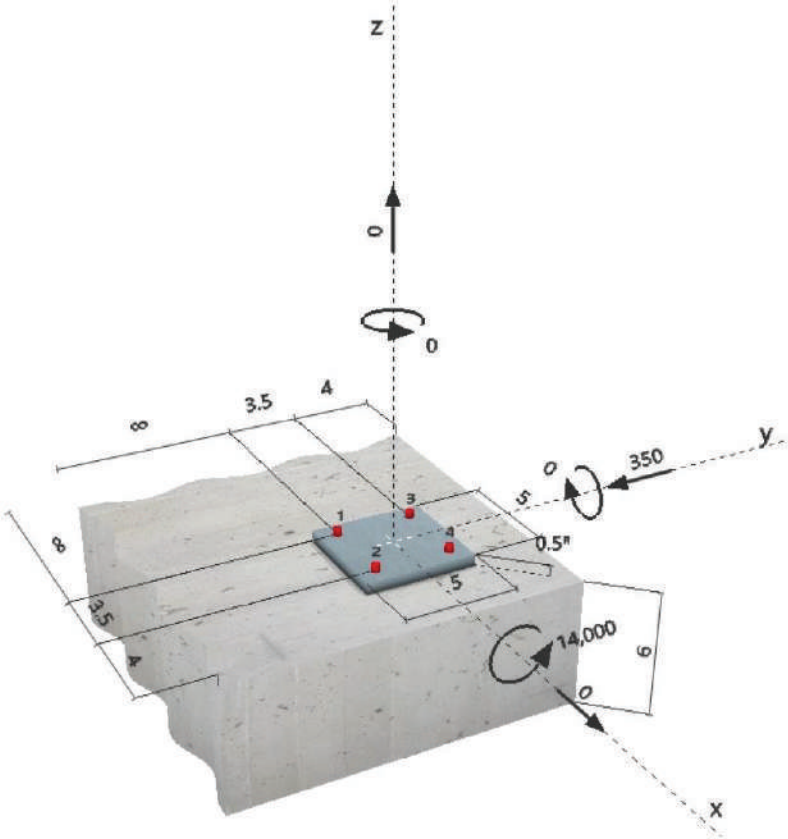

www.hilti.us

Profis Anchor 2.8.1

Company:	Stutzki Engineering, Inc.	Page:	2
Specifier:	JC	Project:	2018-208
Address:	241 N Broadway, Suite 302, Milwaukee, WI, 53202	Sub-Project I Pos. No.:	Legato Surface Bracket
Phone I Fax:	414-455-4815 |	Date:	5/7/2019
E-Mail:			

2 Load case/Resulting anchor forces

Load case: Design loads

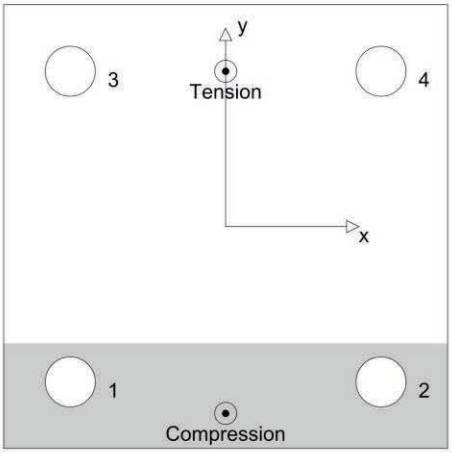

Anchor reactions [lb]
Tension force: (+Tension, -Compression)

Anchor	Tension force	Shear force	Shear force x	Shear force y
1	0	87	0	-87
2	0	87	0	-87
3	1,816	87	0	-87
4	1,816	87	0	-87

max. concrete compressive strain:	0.28 [‰]
max. concrete compressive stress:	1,225 [psi]
resulting tension force in (x/y)=(0.000/1.750):	3,632 [lb]
resulting compression force in (x/y)=(0.000/-2.105):	3,632 [lb]

Anchor forces are calculated based on the assumption of a rigid anchor plate.

3 Tension load

	Load N_{ua} [lb]	Capacity ϕN_n [lb]	Utilization $\beta_N = N_{ua}/\phi N_n$	Status
Steel Strength*	1,816	7,689	24	OK
Pullout Strength*	N/A	N/A	N/A	N/A
Concrete Breakout Strength**	3,632	3,713	98	OK

* anchor having the highest loading **anchor group (anchors in tension)

3.1 Steel Strength

N_{sa} = Value	refer to Hilti Technical Data
$\phi N_{sa} \geq N_{ua}$	ACI 318-14 Table 17.3.1.1

Variables

$A_{se,N}$ [in.^{2}]	f_{uta} [psi]
0.09	137,750

Calculations

N_{sa} [lb]
11,830

Results

N_{sa} [lb]	ϕ_{steel}	ϕN_{sa} [lb]	N_{ua} [lb]
11,830	0.650	7,689	1,816

© 2019 R&B Wagner, Inc. All Rights Reserved.
WagnerArchitectural.com

www.hilti.us

Profis Anchor 2.8.1

Company:	Stutzki Engineering, Inc.	Page:	3
Specifier:	JC	Project:	2018-208
Address:	241 N Broadway, Suite 302, Milwaukee, WI, 53202	Sub-Project I Pos. No.:	Legato Surface Bracket
Phone I Fax:	414-455-4815 |	Date:	5/7/2019
E-Mail:			

3.2 Concrete Breakout Strength

$N_{cbg} = \left(\frac{A_{Nc}}{A_{Nc0}}\right) \psi_{ec,N}\, \psi_{ed,N}\, \psi_{c,N}\, \psi_{cp,N}\, N_b$ — ACI 318-14 Eq. (17.4.2.1b)

$\phi\ N_{cbg} \geq N_{ua}$ — ACI 318-14 Table 17.3.1.1

A_{Nc} see ACI 318-14, Section 17.4.2.1, Fig. R 17.4.2.1(b)

$A_{Nc0} = 9\, h_{ef}^2$ — ACI 318-14 Eq. (17.4.2.1c)

$\psi_{ec,N} = \left(\frac{1}{1 + \frac{2\, e'_N}{3\, h_{ef}}}\right) \leq 1.0$ — ACI 318-14 Eq. (17.4.2.4)

$\psi_{ed,N} = 0.7 + 0.3 \left(\frac{c_{a,min}}{1.5 h_{ef}}\right) \leq 1.0$ — ACI 318-14 Eq. (17.4.2.5b)

$\psi_{cp,N} = \text{MAX}\left(\frac{c_{a,min}}{c_{ac}}, \frac{1.5 h_{ef}}{c_{ac}}\right) \leq 1.0$ — ACI 318-14 Eq. (17.4.2.7b)

$N_b = k_c\, \lambda_a \sqrt{f'_c}\, h_{ef}^{1.5}$ — ACI 318-14 Eq. (17.4.2.2a)

Variables

h_{ef} [in.]	$e_{c1,N}$ [in.]	$e_{c2,N}$ [in.]	$c_{a,min}$ [in.]	$\psi_{c,N}$
2.800	0.000	0.000	4.000	1.000

c_{ac} [in.]	k_c	λ_a	f'_c [psi]
5.030	17	1.000	4,000

Calculations

A_{Nc} [in.^{2}]	A_{Nc0} [in.^{2}]	$\psi_{ec1,N}$	$\psi_{ec2,N}$	$\psi_{ed,N}$	$\psi_{cp,N}$	N_b [lb]
95.94	70.56	1.000	1.000	0.986	1.000	5,038

Results

N_{cbg} [lb]	$\phi_{concrete}$	$\phi\ N_{cbg}$ [lb]	N_{ua} [lb]
6,752	0.550	3,713	3,632

© 2019 R&B Wagner, Inc. All Rights Reserved.
WagnerArchitectural.com

4 Shear load

	Load V_{ua} [lb]	Capacity ϕV_n [lb]	Utilization $\beta_V = V_{ua}/\phi V_n$	Status
Steel Strength*	87	2,982	3	OK
Steel failure (with lever arm)*	N/A	N/A	N/A	N/A
Pryout Strength**	350	13,487	3	OK
Concrete edge failure in direction x+**	350	5,182	7	OK

* anchor having the highest loading **anchor group (relevant anchors)

4.1 Steel Strength

V_{sa} = Value refer to Hilti Technical Data

$\phi\ V_{steel} \geq V_{ua}$ ACI 318-14 Table 17.3.1.1

Variables

$A_{se,V}$ [in.^{2}]	f_{uta} [psi]
0.09	137,750

Calculations

V_{sa} [lb]
4,970

Results

V_{sa} [lb]	ϕ_{steel}	$\phi\ V_{sa}$ [lb]	V_{ua} [lb]
4,970	0.600	2,982	87

4.2 Pryout Strength

$V_{cpg} = k_{cp}\left[\left(\frac{A_{Nc}}{A_{Nc0}}\right)\psi_{ec,N}\,\psi_{ed,N}\,\psi_{c,N}\,\psi_{cp,N}\,N_b\right]$ ACI 318-14 Eq. (17.5.3.1b)

$\phi\ V_{cpg} \geq V_{ua}$ ACI 318-14 Table 17.3.1.1

A_{Nc} see ACI 318-14, Section 17.4.2.1, Fig. R 17.4.2.1(b)

$A_{Nc0} = 9\,h_{ef}^2$ ACI 318-14 Eq. (17.4.2.1c)

$\psi_{ec,N} = \left(\frac{1}{1+\frac{2\,e_N'}{3\,h_{ef}}}\right) \leq 1.0$ ACI 318-14 Eq. (17.4.2.4)

$\psi_{ed,N} = 0.7 + 0.3\left(\frac{c_{a,min}}{1.5h_{ef}}\right) \leq 1.0$ ACI 318-14 Eq. (17.4.2.5b)

$\psi_{cp,N} = \mathrm{MAX}\left(\frac{c_{a,min}}{c_{ac}}, \frac{1.5h_{ef}}{c_{ac}}\right) \leq 1.0$ ACI 318-14 Eq. (17.4.2.7b)

$N_b = k_c\,\lambda_a\,\sqrt{f_c'}\,h_{ef}^{1.5}$ ACI 318-14 Eq. (17.4.2.2a)

Variables

k_{cp}	h_{ef} [in.]	$e_{c1,N}$ [in.]	$e_{c2,N}$ [in.]	$c_{a,min}$ [in.]
2	2.800	0.000	0.000	4.000

$\psi_{c,N}$	c_{ac} [in.]	k_c	λ_a	f_c' [psi]
1.000	5.030	17	1.000	4,000

Calculations

A_{Nc} [in.^{2}]	A_{Nc0} [in.^{2}]	$\psi_{ec1,N}$	$\psi_{ec2,N}$	$\psi_{ed,N}$	$\psi_{cp,N}$	N_b [lb]
136.89	70.56	1.000	1.000	0.986	1.000	5,038

Results

V_{cpg} [lb]	$\phi_{concrete}$	$\phi\ V_{cpg}$ [lb]	V_{ua} [lb]
19,267	0.700	13,487	350

4.3 Concrete edge failure in direction x+

$V_{cbg} = \left(\frac{A_{Vc}}{A_{Vc0}}\right) \psi_{ec,V}\, \psi_{ed,V}\, \psi_{c,V}\, \psi_{h,V}\, \psi_{parallel,V}\, V_b$ — ACI 318-14 Eq. (17.5.2.1b)

$\phi\ V_{cbg} \geq V_{ua}$ — ACI 318-14 Table 17.3.1.1

A_{Vc} see ACI 318-14, Section 17.5.2.1, Fig. R 17.5.2.1(b)

$A_{Vc0} = 4.5\, c_{a1}^2$ — ACI 318-14 Eq. (17.5.2.1c)

$\psi_{ec,V} = \left(\frac{1}{1 + \frac{2e_v'}{3c_{a1}}}\right) \leq 1.0$ — ACI 318-14 Eq. (17.5.2.5)

$\psi_{ed,V} = 0.7 + 0.3\left(\frac{c_{a2}}{1.5c_{a1}}\right) \leq 1.0$ — ACI 318-14 Eq. (17.5.2.6b)

$\psi_{h,V} = \sqrt{\frac{1.5c_{a1}}{h_a}} \geq 1.0$ — ACI 318-14 Eq. (17.5.2.8)

$V_b = \left(7\left(\frac{l_e}{d_a}\right)^{0.2} \sqrt{d_a}\right) \lambda_a \sqrt{f_c'}\, c_{a1}^{1.5}$ — ACI 318-14 Eq. (17.5.2.2a)

Variables

c_{a1} [in.]	c_{a2} [in.]	e_{cV} [in.]	$\psi_{c,V}$	h_a [in.]
4.000	4.000	0.000	1.000	6.000

l_e [in.]	λ_a	d_a [in.]	f_c' [psi]	$\psi_{parallel,V}$
2.800	1.000	0.394	4,000	2.000

Calculations

A_{Vc} [in.^{2}]	A_{Vc0} [in.^{2}]	$\psi_{ec,V}$	$\psi_{ed,V}$	$\psi_{h,V}$	V_b [lb]
81.00	72.00	1.000	1.000	1.000	3,290

Results

V_{cbg} [lb]	$\phi_{concrete}$	$\phi\ V_{cbg}$ [lb]	V_{ua} [lb]
7,403	0.700	5,182	350

5 Combined tension and shear loads

β_N	β_V	ζ	Utilization $\beta_{N,V}$ [%]	Status
0.978	0.068	1.000	88	OK

$\beta_{NV} = (\beta_N + \beta_V) / 1.2 <= 1$

6 Warnings

- The anchor design methods in PROFIS Anchor require rigid anchor plates per current regulations (ETAG 001/Annex C, EOTA TR029, etc.). This means load re-distribution on the anchors due to elastic deformations of the anchor plate are not considered - the anchor plate is assumed to be sufficiently stiff, in order not to be deformed when subjected to the design loading. PROFIS Anchor calculates the minimum required anchor plate thickness with FEM to limit the stress of the anchor plate based on the assumptions explained above. The proof if the rigid anchor plate assumption is valid is not carried out by PROFIS Anchor. Input data and results must be checked for agreement with the existing conditions and for plausibility!
- Condition A applies when supplementary reinforcement is used. The Φ factor is increased for non-steel Design Strengths except Pullout Strength and Pryout strength. Condition B applies when supplementary reinforcement is not used and for Pullout Strength and Pryout Strength. Refer to your local standard.
- Refer to the manufacturer's product literature for cleaning and installation instructions.
- Checking the transfer of loads into the base material and the shear resistance are required in accordance with ACI 318 or the relevant standard!
- Hilti post-installed anchors shall be installed in accordance with the Hilti Manufacturer's Printed Installation Instructions (MPII). Reference ACI 318-14, Section 17.8.1.

Fastening meets the design criteria!

5.4. Facia Mounted Bracket Design

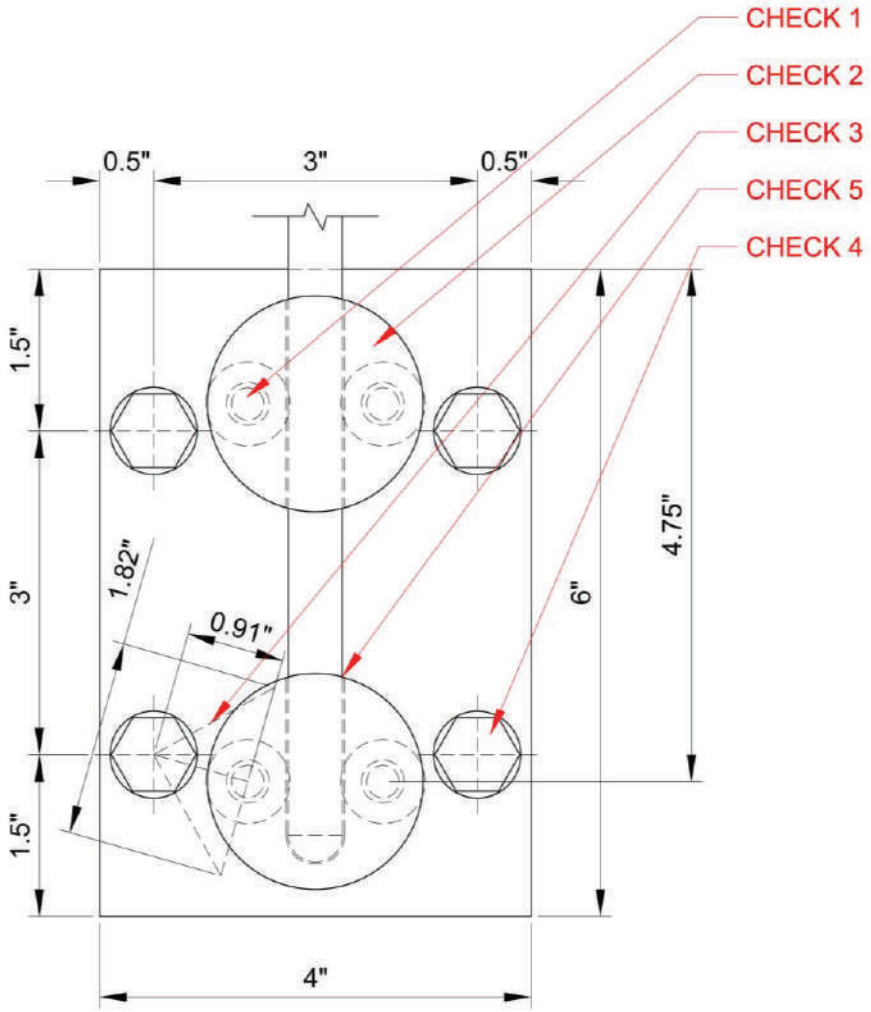

Connection Detail

© 2019 R&B Wagner, Inc. All Rights Reserved.
WagnerArchitectural.com

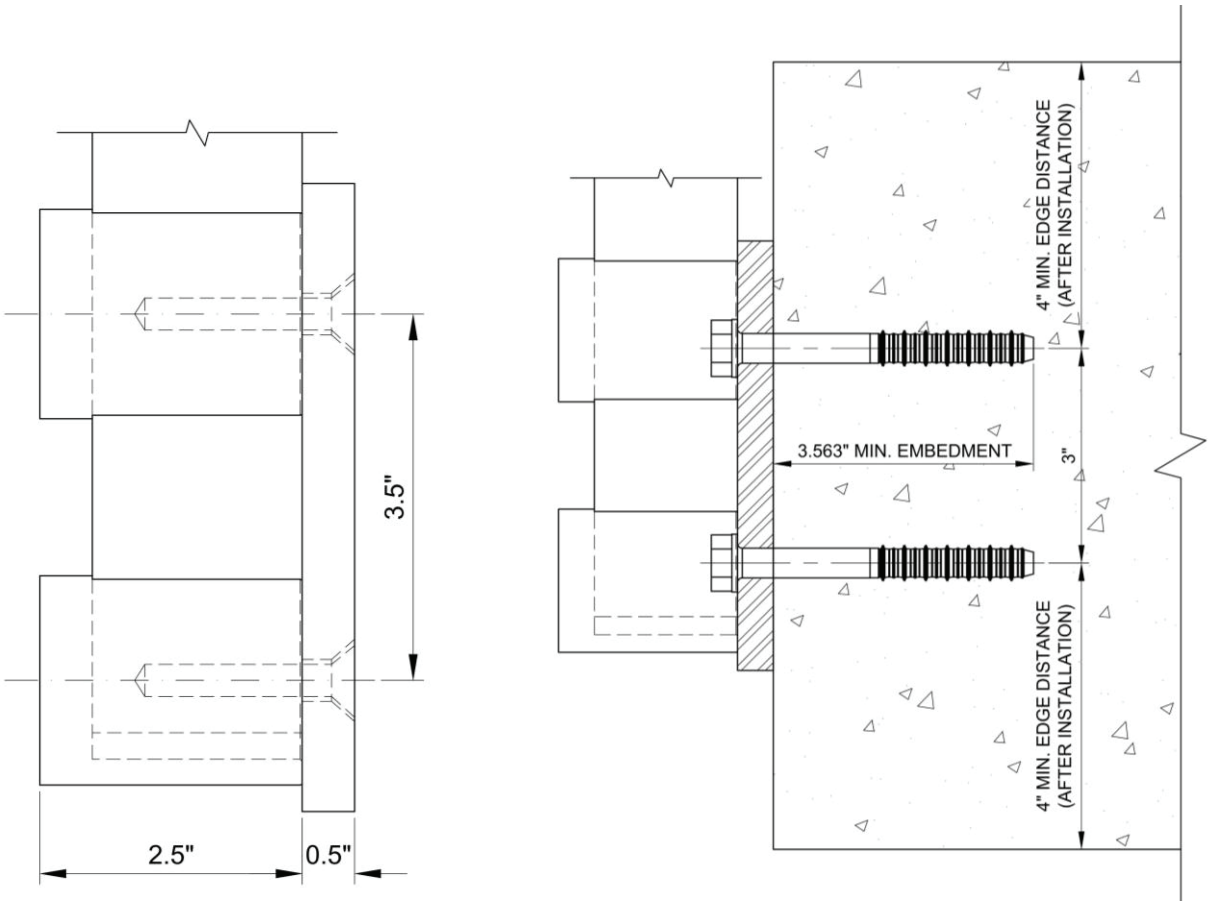

Connection Section View

© 2019 R&B Wagner, Inc. All Rights Reserved.
WagnerArchitectural.com

Loads (ASD)

$DL := 200 \cdot lbf$ $\qquad$ $R := 200 \cdot lbf$

#1 Check Bolt Capacity

(2) - 3/8"-16 Bolts, 316 Stainless Steel, Condition CW

Properties:

$d_{b1} := 0.375 \cdot in$ $\qquad$ $F_{y1} := 65 \cdot ksi$ $\qquad$ $F_{u1} := 100ksi$ $\qquad$ $N_1 := 16 \cdot \frac{1}{in}$

$LE_1 := 0.375 \cdot in$ $\qquad$ $F_{us1} := 70ksi$ $\qquad$ $SF_1 = 2.5$

$$F_{nt1} := \min\left(0.75 \cdot F_{y1}, \frac{1}{SF_1} \cdot F_{u1}\right) = 40 \cdot ksi \qquad F_{nv1} := \min\left(0.75 \cdot F_{y1} \div \sqrt{3}, \frac{1}{SF_1} \cdot F_{u1} \div \sqrt{3}\right) = 23.09 \cdot ksi$$

$$A_{S1} := 0.7854 \cdot \left(d_{b1} - \frac{0.9743}{N_1}\right)^2 = 0.077\,in^2 \qquad A_{R1} := 0.7854 \cdot \left(d_{b1} - \frac{1.2269}{N_1}\right)^2 = 0.07\,in^2$$

Demand

Tension $\qquad$ $T_1 := \frac{R}{2 \cdot Bolts} \cdot \frac{47 \cdot in}{3.5 \cdot in} = 1343\,lbf$

Shear $\qquad$ $V_1 := 0.0 \cdot lbf$

Capacity

Tension Capacity $\qquad$ $T_{n1} := F_{nt1} \cdot A_{S1} = 3100 \cdot lbf$

Shear Capacity $\qquad$ $V_{n1} := F_{nv1} \cdot A_{R1} = 1614\,lbf$

Pull-out Capacity

$TSA_{E1} := 0.0360 \cdot in^2$ $\qquad$ $TSA_{I1} := 0.0520 \cdot in^2$

Internal Thread Capacity $\qquad$ Conditions = "Thick"

$$T_{I1} := \frac{LE_1 \cdot N_1 \cdot TSA_{I1} \cdot F_{us1}}{SF_1 \cdot \sqrt{3}} = 5044\,lbf$$

External Thread Capacity

$$T_{E1} := \min\left(\frac{LE_1 \cdot N_1 \cdot TSA_{E1} \cdot F_{u1}}{SF_1 \cdot \sqrt{3}}, \frac{0.75 \cdot LE_1 \cdot N_1 \cdot TSA_{E1} \cdot F_{y1}}{\sqrt{3}}\right) = 4988\,lbf$$

Pull-out Capacity $\qquad$ $T_{outn1} := \min(T_{I1}, T_{E1}) = 4988 \cdot lbf$

Interaction

$$IR1_1 := \left(\frac{T_1}{T_{n1}}\right)^2 + \left(\frac{V_1}{V_{n1}}\right)^2 = 0.19 \qquad IR2_1 := \left(\frac{T_1}{T_{outn1}}\right)^2 = 0.07$$

CheckASD1 = "OK"

© 2019 R&B Wagner, Inc. All Rights Reserved.
WagnerArchitectural.com

#2 Check Standoff for Tension

Semi-Circle Standoff, 316 Stainless Steel

Properties:

$F_{y2} := 30 \cdot ksi$ $\qquad A_2 := 0.7912 \cdot in^2$

Demand

Semi-Circle Tension $\qquad T_2 := R \cdot \frac{47 \cdot in}{3.5 \cdot in} = 2686\,lbf$

Capacity $\qquad \Omega_2 := 1.67$

Tension Capacity $\qquad T_{n2} := \frac{F_{y2} \cdot A_2}{\Omega_2} = 14213\,lbf$

Interaction

$IR1_2 := \frac{T_2}{T_{n2}} = 0.19$ $\qquad$ CheckASD2 = "OK"

#3 Check Base Plate for Bending

6" x 4" x 1/2" Plate, 316 Stainless Steel

Properties:

$t_3 := 0.50 \cdot in$ $\qquad b_3 := 1.82 \cdot in$ $\qquad F_{y3} := 30 \cdot ksi$ $\qquad Z_{w3} := 0.25 \cdot b_3 \cdot t_3^2 = 0.11\,in^3$

Force

Weak Axis Moment $\qquad M_3 := \left(\frac{R}{2 \cdot Bolts} \cdot \frac{46.5 \cdot in}{3.0 \cdot in}\right) \cdot 0.91 \cdot in = 1.41 \cdot kip \cdot in$

Capacity $\qquad \Omega_3 := 1.67$

Weak Axis Moment Capacity $\qquad M_{n3} := \frac{F_{y3} \cdot Z_{w3}}{\Omega_3} = 2.04\,in \cdot kip$

Interaction

$IR1_3 := \frac{M_3}{M_{n3}} = 0.69$

CheckASD3 = "OK"

© 2019 R&B Wagner, Inc. All Rights Reserved.
WagnerArchitectural.com

#4 Check Bolt Capacity

(4) - 1/2"-13 Bolts, 316 Stainless Steel, Condition A, Tapped in Min. 3/8" Thick A36 Plate (or Better)

Properties:

$d_{b4} := 0.50 \cdot in$ $\quad F_{y4} := 30 \cdot ksi$ $\quad F_{u4} := 75ksi$ $\quad N_4 := 13 \cdot \frac{1}{in}$

$LE_4 := 0.375 \cdot in$ $\quad F_{us4} := 58ksi$ $\quad SF_4 = 2.5$

$$F_{nt4} := \min\left(0.75 \cdot F_{y4}, \frac{1}{SF_4} \cdot F_{u4}\right) = 22.5 \cdot ksi$$

$$F_{nv4} := \min\left(0.75 \cdot F_{y4} \div \sqrt{3}, \frac{1}{SF_4} \cdot F_{u4} \div \sqrt{3}\right) = 12.99 \cdot ksi$$

$$A_{S4} := 0.7854 \cdot \left(d_{b4} - \frac{0.9743}{N_4}\right)^2 = 0.142 in^2$$

$$A_{R4} := 0.7854 \cdot \left(d_{b4} - \frac{1.2269}{N_4}\right)^2 = 0.129 in^2$$

Demand

Tension

$$T_4 := \frac{R}{2 \cdot Bolts} \cdot \frac{49 \cdot in}{3.0 \cdot in} = 1633 lbf$$

Shear

$$V_4 := \frac{DL}{2} = 100 lbf$$

Capacity

Tension Capacity

$$T_{n4} := F_{nt4} \cdot A_{S4} = 3193 \cdot lbf$$

Shear Capacity

$$V_{n4} := F_{nv4} \cdot A_{R4} = 1679 lbf$$

Pull-out Capacity

$TSA_{E4} := 0.0600 \cdot in^2$ $\quad TSA_{I4} := 0.0860 \cdot in^2$

Internal Thread Capacity

Conditions = "Thick"

$$T_{I4} := \frac{LE_4 \cdot N_4 \cdot TSA_{I4} \cdot F_{us4}}{SF_4 \cdot \sqrt{3}} = 5616 lbf$$

External Thread Capacity

$$T_{E4} := \min\left(\frac{LE_4 \cdot N_4 \cdot TSA_{E4} \cdot F_{u4}}{SF_4 \cdot \sqrt{3}}, \frac{0.75 \cdot LE_4 \cdot N_4 \cdot TSA_{E4} \cdot F_{y4}}{\sqrt{3}}\right) = 3800 lbf$$

Pull-out Capacity

$$T_{outn4} := \min(T_{I4}, T_{E4}) = 3800 \cdot lbf$$

Interaction

$$IR1_4 := \left(\frac{T_4}{T_{n4}}\right)^2 + \left(\frac{V_4}{V_{n4}}\right)^2 = 0.27$$

$$IR2_4 := \left(\frac{T_4}{T_{outn4}}\right)^2 = 0.18$$

CheckASD4 = "OK"

© 2019 R&B Wagner, Inc. All Rights Reserved.
WagnerArchitectural.com

#4 Check Anchor Capacity

Hilti HUS-HR M10, SS Anchor

Demand

Anchor Group LRFD Moment $M_4 := 1.6 \cdot R \cdot 47.5 \cdot in = 15.2\,in \cdot kip$

Anchor Group LRFD Shear $V_4 := 1.6 \cdot R = 320\,lbf$

Anchor Capacity

Design Criteria:

- Concrete Strength f'c = 4000 psi min. @ 28 days
- Normal Weight Concrete
- Uncracked Concrete Condition
- 6" Slab Thickness
- 4" Min. Anchor Edge Distance (after installation tolerances)
- 3.563" Min. Embedment

Capacity is per the attached Hilti software output

© 2019 R&B Wagner, Inc. All Rights Reserved.
WagnerArchitectural.com

www.hilti.us

Profis Anchor 2.8.1

Company:	Stutzki Engineering, Inc.	Page:	1
Specifier:	JC	Project:	2018-208
Address:	241 N Broadway, Suite 302, Milwaukee, WI, 53202	Sub-Project I Pos. No.:	Legato Facia Bracket
Phone I Fax:	414-455-4815 |	Date:	5/7/2019
E-Mail:			

Specifier's comments:

1 Input data

Anchor type and diameter:	**HUS-HR M10x130**
Effective embedment depth:	$h_{ef,act}$ = 2.800 in., h_{nom} = 3.563 in.
Material:	A4
Evaluation Service Report:	Hilti Technical Data
Issued I Valid:	- | -
Proof:	Design method ACI 318-14 / Mech.
Stand-off installation:	e_b = 0.000 in. (no stand-off); t = 0.500 in.
Anchor plate:	l_x x l_y x t = 4.000 in. x 6.000 in. x 0.500 in.; (Recommended plate thickness: not calculated
Profile:	no profile
Base material:	uncracked concrete, 4000, f_c' = 4,000 psi; h = 6.000 in.
Installation:	**hammer drilled hole, Installation condition: Dry**
Reinforcement:	tension: condition B, shear: condition B; no supplemental splitting reinforcement present edge reinforcement: none or < No. 4 bar

[R] - The anchor calculation is based on a rigid anchor plate assumption.

Geometry [in.] & Loading [lb, in.lb]

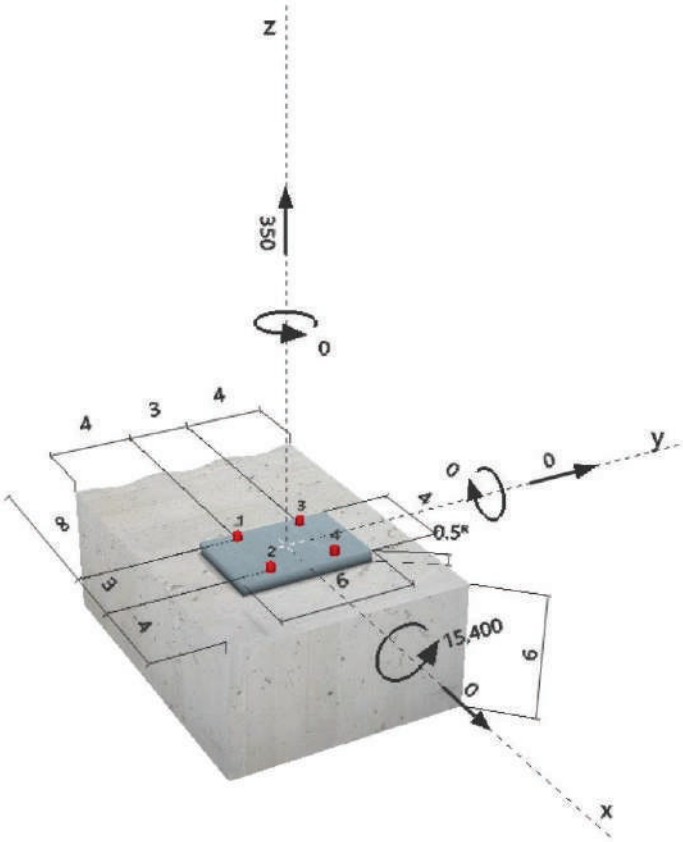

www.hilti.us

Profis Anchor 2.8.1

Company:	Stutzki Engineering, Inc.	Page:	2
Specifier:	JC	Project:	2018-208
Address:	241 N Broadway, Suite 302, Milwaukee, WI, 53202	Sub-Project I Pos. No.:	Legato Facia Bracket
Phone I Fax:	414-455-4815 |	Date:	5/7/2019
E-Mail:			

2 Load case/Resulting anchor forces

Load case: Design loads

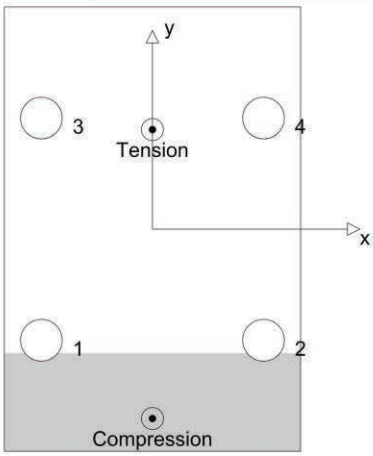

Anchor reactions [lb]
Tension force: (+Tension, -Compression)

Anchor	Tension force	Shear force	Shear force x	Shear force y
1	108	0	0	0
2	108	0	0	0
3	1,980	0	0	0
4	1,980	0	0	0

max. concrete compressive strain: 0.33 [‰]
max. concrete compressive stress: 1,443 [psi]
resulting tension force in (x/y)=(0.000/1.344): 4,176 [lb]
resulting compression force in (x/y)=(0.000/-2.558): 3,826 [lb]

Anchor forces are calculated based on the assumption of a rigid anchor plate.

3 Tension load

	Load N_{ua} [lb]	Capacity ϕN_n [lb]	Utilization $\beta_N = N_{ua}/\phi N_n$	Status
Steel Strength*	1,980	7,689	26	OK
Pullout Strength*	N/A	N/A	N/A	N/A
Concrete Breakout Strength**	4,176	4,296	98	OK

* anchor having the highest loading **anchor group (anchors in tension)

3.1 Steel Strength

N_{sa} = Value refer to Hilti Technical Data
$\phi N_{sa} \geq N_{ua}$ ACI 318-14 Table 17.3.1.1

Variables

$A_{se,N}$ [in.^{2}]	f_{uta} [psi]
0.09	137,750

Calculations

N_{sa} [lb]
11,830

Results

N_{sa} [lb]	ϕ_{steel}	ϕN_{sa} [lb]	N_{ua} [lb]
11,830	0.650	7,689	1,980

© 2019 R&B Wagner, Inc. All Rights Reserved.
WagnerArchitectural.com

Company:	Stutzki Engineering, Inc.	Page:	3
Specifier:	JC	Project:	2018-208
Address:	241 N Broadway, Suite 302, Milwaukee, WI, 53202	Sub-Project I Pos. No.:	Legato Facia Bracket
Phone I Fax:	414-455-4815 |	Date:	5/7/2019
E-Mail:			

3.2 Concrete Breakout Strength

$N_{cbg} = \left(\frac{A_{Nc}}{A_{Nc0}}\right) \psi_{ec,N}\, \psi_{ed,N}\, \psi_{c,N}\, \psi_{cp,N}\, N_b$ — ACI 318-14 Eq. (17.4.2.1b)

$\phi\ N_{cbg} \geq N_{ua}$ — ACI 318-14 Table 17.3.1.1

A_{Nc} see ACI 318-14, Section 17.4.2.1, Fig. R 17.4.2.1(b)

$A_{Nc0} = 9\, h_{ef}^2$ — ACI 318-14 Eq. (17.4.2.1c)

$\psi_{ec,N} = \left(\frac{1}{1 + \frac{2\, e'_N}{3\, h_{ef}}}\right) \leq 1.0$ — ACI 318-14 Eq. (17.4.2.4)

$\psi_{ed,N} = 0.7 + 0.3 \left(\frac{c_{a,min}}{1.5 h_{ef}}\right) \leq 1.0$ — ACI 318-14 Eq. (17.4.2.5b)

$\psi_{cp,N} = \text{MAX}\left(\frac{c_{a,min}}{c_{ac}}, \frac{1.5 h_{ef}}{c_{ac}}\right) \leq 1.0$ — ACI 318-14 Eq. (17.4.2.7b)

$N_b = k_c\, \lambda_a \sqrt{f'_c}\, h_{ef}^{1.5}$ — ACI 318-14 Eq. (17.4.2.2a)

Variables

h_{ef} [in.]	$e_{c1,N}$ [in.]	$e_{c2,N}$ [in.]	$c_{a,min}$ [in.]	$\psi_{c,N}$
2.667	0.000	1.344	4.000	1.000

c_{ac} [in.]	k_c	λ_a	f'_c [psi]
5.030	24	1.000	4,000

Calculations

A_{Nc} [in.^{2}]	A_{Nc0} [in.^{2}]	$\psi_{ec1,N}$	$\psi_{ec2,N}$	$\psi_{ed,N}$	$\psi_{cp,N}$	N_b [lb]
121.00	64.00	1.000	0.748	1.000	0.835	6,610

Results

N_{cbg} [lb]	$\phi_{concrete}$	$\phi\ N_{cbg}$ [lb]	N_{ua} [lb]
7,810	0.550	4,296	4,176

© 2019 R&B Wagner, Inc. All Rights Reserved.
WagnerArchitectural.com

www.hilti.us

Profis Anchor 2.8.1

Company:	Stutzki Engineering, Inc.	Page:	4
Specifier:	JC	Project:	2018-208
Address:	241 N Broadway, Suite 302, Milwaukee, WI, 53202	Sub-Project I Pos. No.:	Legato Facia Bracket
Phone I Fax:	414-455-4815 |	Date:	5/7/2019
E-Mail:			

4 Shear load

	Load V_{ua} [lb]	Capacity ϕV_n [lb]	Utilization $\beta_V = V_{ua}/\phi V_n$	Status
Steel Strength*	N/A	N/A	N/A	N/A
Steel failure (with lever arm)*	N/A	N/A	N/A	N/A
Pryout Strength*	N/A	N/A	N/A	N/A
Concrete edge failure in direction **	N/A	N/A	N/A	N/A

* anchor having the highest loading **anchor group (relevant anchors)

5 Warnings

- The anchor design methods in PROFIS Anchor require rigid anchor plates per current regulations (ETAG 001/Annex C, EOTA TR029, etc.). This means load re-distribution on the anchors due to elastic deformations of the anchor plate are not considered - the anchor plate is assumed to be sufficiently stiff, in order not to be deformed when subjected to the design loading. PROFIS Anchor calculates the minimum required anchor plate thickness with FEM to limit the stress of the anchor plate based on the assumptions explained above. The proof if the rigid anchor plate assumption is valid is not carried out by PROFIS Anchor. Input data and results must be checked for agreement with the existing conditions and for plausibility!
- Condition A applies when supplementary reinforcement is used. The Φ factor is increased for non-steel Design Strengths except Pullout Strength and Pryout strength. Condition B applies when supplementary reinforcement is not used and for Pullout Strength and Pryout Strength. Refer to your local standard.
- Refer to the manufacturer's product literature for cleaning and installation instructions.
- Checking the transfer of loads into the base material and the shear resistance are required in accordance with ACI 318 or the relevant standard!
- Hilti post-installed anchors shall be installed in accordance with the Hilti Manufacturer's Printed Installation Instructions (MPII). Reference ACI 318-14, Section 17.8.1.

Fastening meets the design criteria!

© 2019 R&B Wagner, Inc. All Rights Reserved.
WagnerArchitectural.com

6. Railing Connection Design

6.1. Design Criteria

6.1.1. Fasteners

A4-50 Bolts,	Fy = 65 ksi, min	Fu = 100 ksi, min

6.1.2. Stainless Steel

316 SS	Fy = 30 ksi, min	Fu = 70 ksi, min

6.2. Overall Geometry and Location

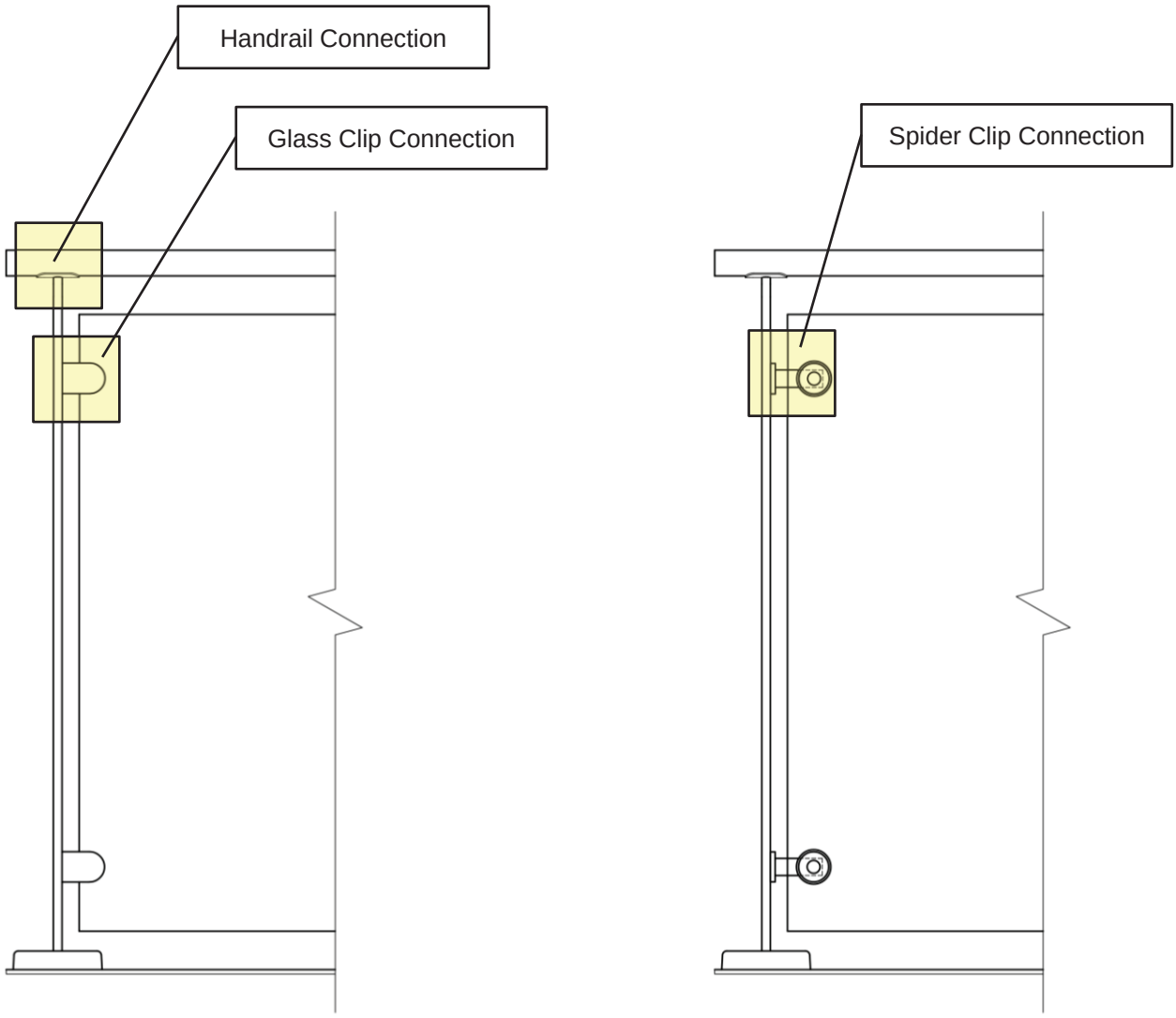

© 2019 R&B Wagner, Inc. All Rights Reserved.
WagnerArchitectural.com

6.3. Glass Clip

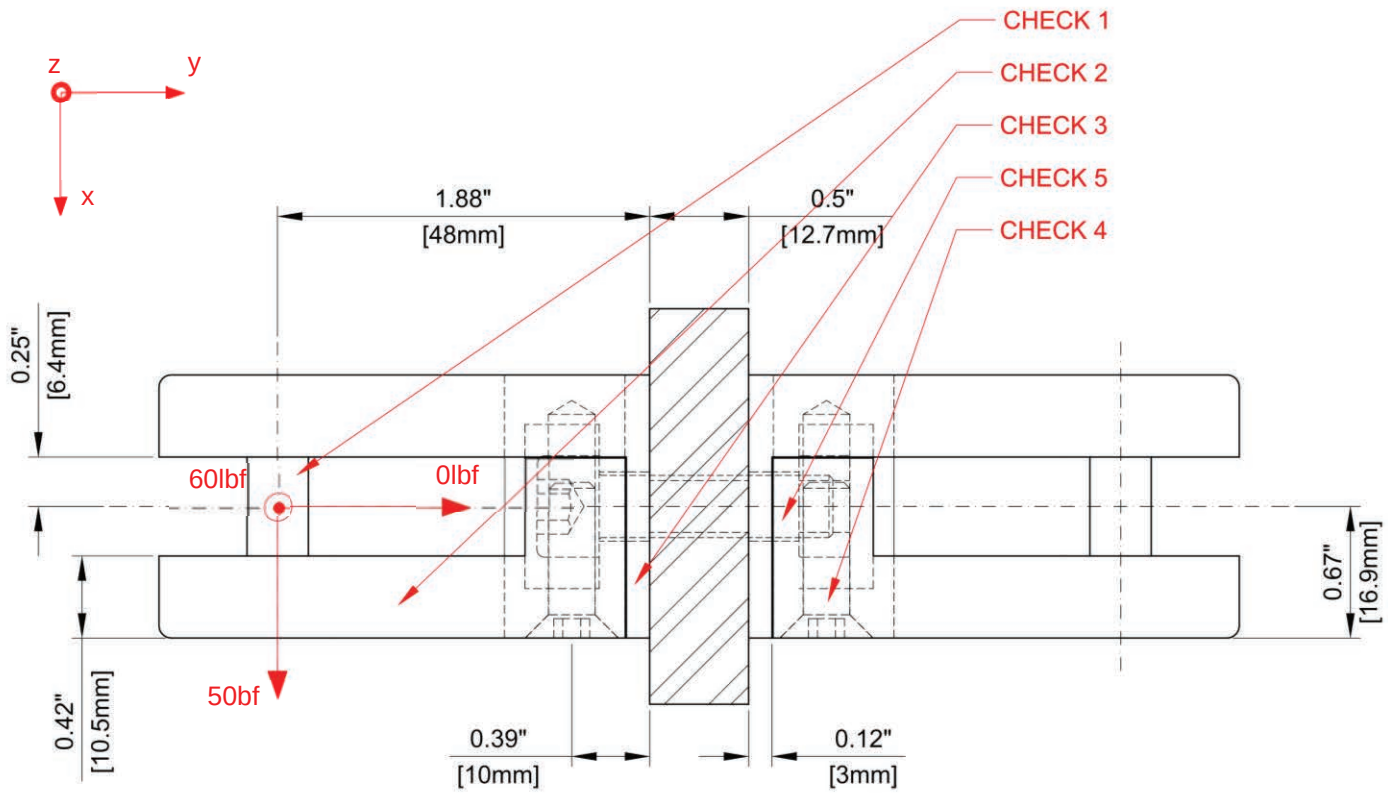

Connection Detail

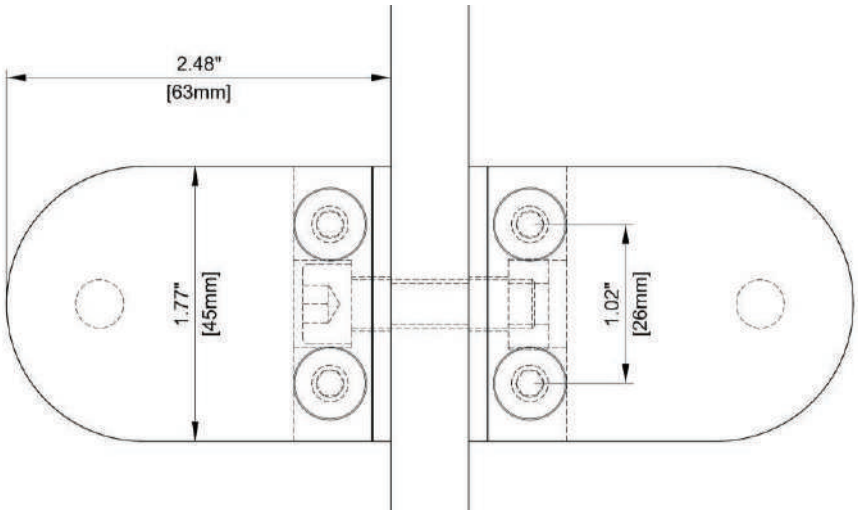

Connection Detail

© 2019 R&B Wagner, Inc. All Rights Reserved.
WagnerArchitectural.com

Loads (ASD)

$P_x := 50 \cdot lbf$ Infill Panel Load $M_x := 0.0 \cdot lbf \cdot in$

$P_y := 0 \cdot lbf$ $M_y := 0.0 \cdot lbf \cdot in$

$P_z := 60 \cdot lbf$ Glass Dead Load $M_z := 0.0 \cdot lbf \cdot in$

#1 Check Pin Capacity

3/8" Dia Pin, A4-50 Stainless Steel

Input

$d_1 := 0.375 \cdot in$ $A_{b1} := 0.25 \cdot \pi \cdot d_1^2 = 0.11\, in^2$ $F_{u1} := 500 \cdot MPa$

$F_{nt1} := 0.75 \cdot F_{u1} = 54.39 \cdot ksi$ $F_{nv1} := 0.563 \cdot F_{u1} = 40.83 \cdot ksi$

Forces

Shear $V_1 := P_z = 0.06 \cdot kip$

Tension $T_1 := 0.0 \cdot lbf = 0 \cdot kip$

Capacity $\Omega_1 := 2.00$

Shear $V_{n1} := \dfrac{F_{nv1} \cdot A_{b1}}{\Omega_1} = 2255\, lbf$

Tension $T_{n1} := \dfrac{F_{nt1} \cdot A_{b1}}{\Omega_1} = 3 \cdot kip$

Interaction

$$IR1_1 := \left(\frac{T_1}{T_{n1}}\right)^2 + \left(\frac{V_1}{V_{n1}}\right)^2 = 0$$

CheckASD1 = "OK"

© 2019 R&B Wagner, Inc. All Rights Reserved.
WagnerArchitectural.com

#2 Check Clip Plate Capacity

63mm x 45mm x 10.5mm Plate, 316 Stainless Steel

Properties:

$t_2 := 10.5 \cdot mm$ $\quad h_2 := 45 \cdot mm$ $\quad L_2 := 48 \cdot mm$

$F_{y2} := 30ksi$ $\quad F_{u2} := 70ksi$ $\quad E_2 := 29000ksi$

$Z_{s2} := 0.25 \cdot t_2 \cdot h_2^2 = 0.32\,in^3$ $\quad Z_{w2} := 0.25 \cdot h_2 \cdot t_2^2 = 0.08\,in^3$

$I_{w2} := \frac{h_2 \cdot t_2^3}{12} = 0.01\,in^4$ $\quad S_{s2} := \frac{t_2 \cdot h_2^2}{6} = 0.22\,in^3$

$r_2 := \sqrt{\frac{I_{w2}}{t_2 \cdot h_2}} = 0.12\,in$ $\quad kLr_2 := \frac{2.0 \cdot L_2}{r_2}$

Force

Strong Axis Moment $\quad M_{s2} := P_z \cdot 48 \cdot mm = 0.11 \cdot in \cdot kip$

Weak Axis Moment $\quad M_{w2} := P_x \cdot 45 \cdot mm = 0.09\,in \cdot kip$

Capacity $\quad \Omega_2 := 1.67$

Strong Axis Moment $\quad \frac{L_2 \cdot h_2}{t_2^2} = 19.59 \quad \boxed{<} \quad \frac{0.08 \cdot E_2}{F_{y2}} = 77$

$M_{ns2} := \frac{F_{y2} \cdot Z_{s2}}{\Omega_2} = 5.83 \cdot in \cdot kip$

Weak Axis Moment $\quad M_{nw2} := \frac{F_{y2} \cdot Z_{w2}}{\Omega_2} = 1.36\,in \cdot kip$

Interaction

$IR1_2 := \frac{M_{w2}}{M_{nw2}} + \frac{M_{s2}}{M_{ns2}} = 0.08$

$\boxed{CheckASD2 = \text{"OK"}}$

© 2019 R&B Wagner, Inc. All Rights Reserved.
WagnerArchitectural.com

#3 Check Clip Plate for Local Bending

3mm Thick Clip Wall, 316 Stainless Steel

Properties:

$t_3 := 3.0 \cdot mm$ $\quad b_3 := 45 \cdot mm$ $\quad F_{y3} := 30 \cdot ksi$ $\quad Z_{w3} := 0.25 \cdot b_3 \cdot t_3^2 = 0.006\,in^3$

Force

Bolt Tension

$$T_3 := P_x \cdot \frac{48 \cdot mm}{90\% \cdot 17 \cdot mm} + P_z \cdot \frac{48 \cdot mm}{90\% \cdot 42 \cdot mm \div 2} = 309 \cdot lbf$$

Weak Axis Moment

$$M_3 := T_3 \cdot 6 \cdot mm = 0.07 \cdot kip \cdot in$$

Capacity

$$\Omega_3 := 1.67$$

Weak Axis Moment

$$M_{n3} := \frac{F_{y3} \cdot Z_{w3}}{\Omega_3} = 0.11\,in \cdot kip$$

Interaction

$$IR1_3 := \frac{M_3}{M_{n3}} = 0.66$$

$$\boxed{CheckASD3 = \text{"OK"}}$$

© 2019 R&B Wagner, Inc. All Rights Reserved.
WagnerArchitectural.com

#4 Check Bolt Capacity

(2) - M6x1 Bolts, A4-50 Stainless Steel

Properties:

$d_{b4} := 6 \cdot mm$ $\quad F_{y4} := 210 \cdot MPa$ $\quad F_{u4} := 500 \cdot MPa$ $\quad N_4 := \frac{1}{1} \cdot \frac{1}{mm}$

$LE_4 := 0.20 \cdot in$ $\quad F_{us4} := 70ksi$ $\quad SF_4 = 3$

$$F_{nt4} := \min\left(0.75 \cdot F_{y4}, \frac{1}{SF_4} \cdot F_{u4}\right) = 22.84 \cdot ksi$$

$$F_{nv4} := \min\left(0.75 \cdot F_{y4} \div \sqrt{3}, \frac{1}{SF_4} \cdot F_{u4} \div \sqrt{3}\right) = 13.19 \cdot ksi$$

$$A_{S4} := 0.7854 \cdot \left(d_{b4} - \frac{0.9743}{N_4}\right)^2 = 0.031\,in^2$$

$$A_{R4} := 0.7854 \cdot \left(d_{b4} - \frac{1.2269}{N_4}\right)^2 = 0.028\,in^2$$

Demand

Tension

$$T_4 := \frac{P_x}{2 \cdot Bolts} \cdot \frac{48 \cdot mm}{90\% \cdot 10 \cdot mm} = 133\,lbf$$

Shear

$$V_4 := \sqrt{\left(P_z \cdot \frac{45 \cdot mm}{26 \cdot mm}\right)^2 + \left(\frac{P_z}{2}\right)^2} = 108\,lbf$$

Capacity

Tension Capacity $\quad T_{n4} := F_{nt4} \cdot A_{S4} = 702 \cdot lbf$

Shear Capacity $\quad V_{n4} := F_{nv4} \cdot A_{R4} = 366\,lbf$

Pull-out Capacity

$TSA_{E4} := 8.65 \cdot mm^2$ $\quad TSA_{I4} := 12.19 \cdot mm^2$

Internal Thread Capacity $\quad$ Conditions = "Thin"

$$T_{I4} := \frac{LE_4 \cdot N_4 \cdot TSA_{I4} \cdot F_{us4}}{SF_4 \cdot \sqrt{3}} = 1293\,lbf$$

External Thread Capacity

$$T_{E4} := \min\left(\frac{LE_4 \cdot N_4 \cdot TSA_{E4} \cdot F_{u4}}{SF_4 \cdot \sqrt{3}}, \frac{0.75 \cdot LE_4 \cdot N_4 \cdot TSA_{E4} \cdot F_{y4}}{\sqrt{3}}\right) = 898\,lbf$$

Pull-out Capacity $\quad T_{outn4} := \min(T_{I4}, T_{E4}) = 898 \cdot lbf$

Interaction

$$IR1_4 := \left(\frac{T_4}{T_{n4}}\right)^2 + \left(\frac{V_4}{V_{n4}}\right)^2 = 0.12$$

$$IR2_4 := \left(\frac{T_4}{T_{outn4}}\right)^2 = 0.02$$

CheckASD4 = "OK"

© 2019 R&B Wagner, Inc. All Rights Reserved.
WagnerArchitectural.com

#5 Check Bolt Capacity

M8x1.25 Bolt, A4-50 Stainless Steel

Properties:

$d_{b5} := 8 \cdot mm$ $\quad F_{y5} := 210 \cdot MPa$ $\quad F_{u5} := 500 \cdot MPa$ $\quad N_5 := \frac{1}{1.25} \cdot \frac{1}{mm}$

$F_{nt5} := \min\left(0.75 \cdot F_{y5}, \frac{1}{SF_5} \cdot F_{u5}\right) = 22.84 \cdot ksi$ $\quad F_{nv5} := \min\left(0.75 \cdot F_{y5} \div \sqrt{3}, \frac{1}{SF_5} \cdot F_{u5} \div \sqrt{3}\right) = 13.19 \cdot ksi$

$A_{S5} := 0.7854 \cdot \left(d_{b5} - \frac{0.9743}{N_5}\right)^2 = 0.056\,in^2$ $\quad A_{R5} := 0.7854 \cdot \left(d_{b5} - \frac{1.2269}{N_5}\right)^2 = 0.051\,in^2$

Demand

Tension $\quad T_5 := P_x \cdot \frac{48 \cdot mm}{90\% \cdot 17 \cdot mm} + P_z \cdot \frac{48 \cdot mm}{90\% \cdot 42 \cdot mm \div 2} = 309\,lbf$

Shear $\quad V_5 := \sqrt{P_x^2 + P_z^2} = 78\,lbf$

Capacity

Tension Capacity $\quad T_{n5} := F_{nt5} \cdot A_{S5} = 1279 \cdot lbf$

Shear Capacity $\quad V_{n5} := F_{nv5} \cdot A_{R5} = 671\,lbf$

Interaction

$IR1_5 := \left(\frac{T_5}{T_{n5}}\right)^2 + \left(\frac{V_5}{V_{n5}}\right)^2 = 0.07$

CheckASD5 = "OK"

© 2019 R&B Wagner, Inc. All Rights Reserved.
WagnerArchitectural.com

6.4. Spider Clip

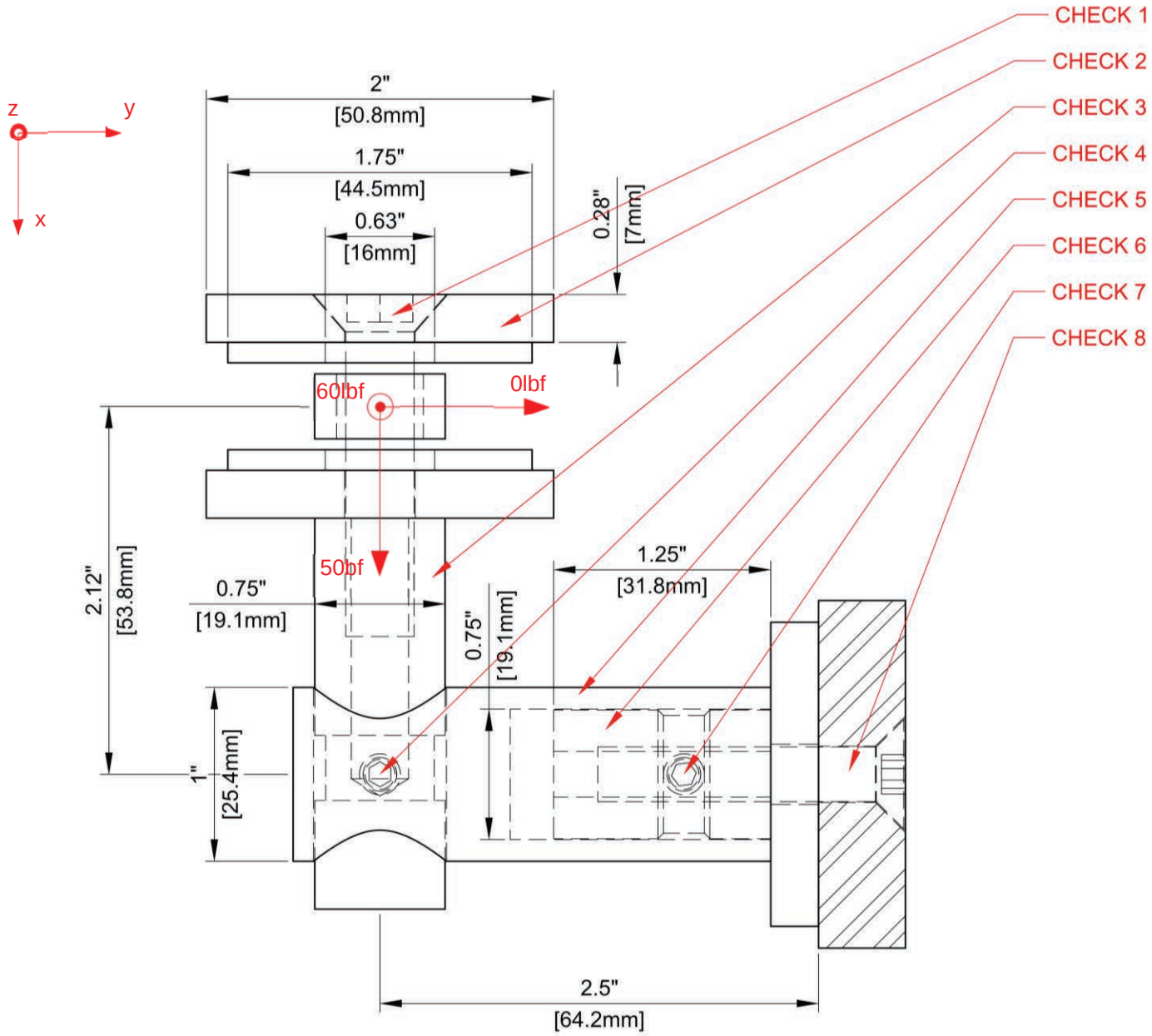

Connection Detail

© 2019 R&B Wagner, Inc. All Rights Reserved.
WagnerArchitectural.com

Loads (ASD)

$P_x := 50 \cdot lbf$ Infill Panel Load

$P_y := 0 \cdot lbf$

$P_z := 60 \cdot lbf$ Glass Dead Load

$M_x := 0.0 \cdot lbf \cdot in$

$M_y := 520 \cdot lbf \cdot in + 50 \cdot lbf \cdot in$

$M_z := 410 \cdot lbf \cdot in$

#1 Check Bolt Capacity

M10x1.5 Bolt, A4-50 Stainless Steel

Properties:

$d_{b1} := 10 \cdot mm$ $F_{y1} := 210 \cdot MPa$ $F_{u1} := 500 \cdot MPa$ $N_1 := \frac{1}{1.5} \cdot \frac{1}{mm}$

$LE_1 := 0.375 \cdot in$ $F_{us1} := 70ksi$ $SF_1 = 2.5$

$F_{nt1} := \min\left(0.75 \cdot F_{y1}, \frac{1}{SF_1} \cdot F_{u1}\right) = 22.84 \cdot ksi$

$F_{nv1} := \min\left(0.75 \cdot F_{y1} \div \sqrt{3}, \frac{1}{SF_1} \cdot F_{u1} \div \sqrt{3}\right) = 13.19 \cdot ksi$

$A_{S1} := 0.7854 \cdot \left(d_{b1} - \frac{0.9743}{N_1}\right)^2 = 0.089 in^2$

$A_{R1} := 0.7854 \cdot \left(d_{b1} - \frac{1.2269}{N_1}\right)^2 = 0.081 in^2$

Demand

Tension $T_1 := P_x + P_z \cdot \frac{2.125 \cdot in}{90\% \cdot 1.75 \cdot in \div 2} = 212 lbf$

Shear $V_1 := P_z = 60 lbf$

Capacity

Tension Capacity $T_{n1} := F_{nt1} \cdot A_{S1} = 2027 \cdot lbf$

Shear Capacity $V_{n1} := F_{nv1} \cdot A_{R1} = 1069 lbf$

Pull-out Capacity

$TSA_{E1} := 23.37 \cdot mm^2$ $TSA_{I1} := 32.22 \cdot mm^2$

Internal Thread Capacity Conditions = "Thick"

$$T_{I1} := \frac{LE_1 \cdot N_1 \cdot TSA_{I1} \cdot F_{us1}}{SF_1 \cdot \sqrt{3}} = 5127 lbf$$

External Thread Capacity

$$T_{E1} := \min\left(\frac{LE_1 \cdot N_1 \cdot TSA_{E1} \cdot F_{u1}}{SF_1 \cdot \sqrt{3}}, \frac{0.75 \cdot LE_1 \cdot N_1 \cdot TSA_{E1} \cdot F_{y1}}{\sqrt{3}}\right) = 3034 lbf$$

Pull-out Capacity $T_{outn1} := \min(T_{I1}, T_{E1}) = 3034 \cdot lbf$

Interaction

$$IR1_1 := \left(\frac{T_1}{T_{n1}}\right)^2 + \left(\frac{V_1}{V_{n1}}\right)^2 = 0.01$$

$$IR2_1 := \left(\frac{T_1}{T_{outn1}}\right)^2 = 0$$

CheckASD1 = "OK"

#2 Check Clamp Capacity

2" Dia Clamp, 316 Stainless Steel

Properties:

$d_{b2} := 0.625 \cdot in$ $\quad D_{b2} := 2.0 \cdot in$ $\quad D_{w2} := 1.75 \cdot in$

$F_{y2} := 30ksi$ $\quad F_{u2} := 70ksi$ $\quad t_2 := 7.0 \cdot mm$

$$b_2 := 2 \cdot \sqrt{\left(\frac{D_{b2} - d_{b2}}{2}\right) \cdot \left(D_{b2} - \frac{D_{b2} - d_{b2}}{2}\right)} = 1.9\,in \qquad Z_{w2} := 0.25 \cdot b_2 \cdot t_2^{\,2} = 0.04\,in^3$$

Force:

Moment

$$M_2 := P_z \cdot \frac{2.125 \cdot in}{90\% \cdot D_{w2} \div 2} \cdot \frac{\left(90\% \cdot D_{w2} - d_{b2}\right)}{2} = 0.08 \cdot in \cdot kip$$

Capacity

$\Omega_2 := 1.67$

Moment Capacity

$$M_{n2} := \frac{F_{y2} \cdot Z_{w2}}{\Omega_2} = 0.65 \cdot in \cdot kip$$

Interaction

$$IR1_2 := \frac{M_2}{M_{n2}} = 0.12$$

CheckASD2 = "OK"

© 2019 R&B Wagner, Inc. All Rights Reserved.
WagnerArchitectural.com

#3 Check Bracket Capacity

3/4" Dia Bracket Shaft, 316 Stainless Steel

Properties:

$d_3 := 0.75 \cdot in$ $\quad L_3 := 2.125in$ $\quad S_3 := \pi \cdot d_3^{\,3} \div 32 = 0.04\,in^3$

$A_3 := \frac{\pi \cdot d_3^{\,2}}{4} = 0.44\,in^2$ $\quad r_3 := \frac{d_3}{4} = 0.19\,in$ $\quad Z_3 := d_3^{\,3} \div 6 = 0.0703\,in^3$

$F_{y3} := 30ksi$ $\quad E_3 := 29000ksi$ $\quad kLr_3 := \frac{1.0 \cdot L_3}{r_3} = 11$

Force

Axial Compression $\quad P_3 := P_x = 0.05 \cdot kip$

Moment $\quad M_3 := P_z \cdot 2.125 \cdot in = 0.13\,in \cdot kip$

Capacity $\quad \Omega_3 := 1.67$

Compression Strength $\quad kLr_3 = 11 \quad \boxed{<} \quad 3.77 \cdot \sqrt{\frac{E_3}{F_{y3}}} = 117$

$$F_{e3} := \frac{\pi^2 \cdot E_3}{(kLr_3)^2} = 2228.34 \cdot ksi$$

$$F_{cr3} := 0.500^{(F_{y3} \div F_{e3})} \cdot F_{y3} = 29.72 \cdot ksi$$

$$P_{n3} := \frac{(F_{cr3} \cdot A_3)}{\Omega_3} = 8 \cdot kip$$

Moment Capacity $\quad M_{n3} := \min\left(\frac{F_{y3} \cdot Z_3}{\Omega_3}, \frac{1.6 \cdot F_{y3} \cdot S_3}{\Omega_3}\right) = 1190 \cdot in \cdot lbf$

Interaction

$IR1_3 := \frac{M_3}{M_{n3}} = 0.11$ $\quad$ CheckASD3 = "OK"

© 2019 R&B Wagner, Inc. All Rights Reserved.
WagnerArchitectural.com

#4 Check Set Screw Capacity

M6x1 Set Screw, A4-50 Stainless Steel

Properties:

$d_{b4} := 6 \cdot mm$ $\quad F_{y4} := 210 \cdot MPa$ $\quad F_{u4} := 500 \cdot MPa$ $\quad N_4 := \frac{1}{1.0} \cdot \frac{1}{mm}$

$F_{nt4} := \min\left(0.75 \cdot F_{y4}, \frac{1}{SF_4} \cdot F_{u4}\right) = 22.84 \cdot ksi$ $\quad F_{nv4} := \min\left(0.75 \cdot F_{y4} \div \sqrt{3}, \frac{1}{SF_4} \cdot F_{u4} \div \sqrt{3}\right) = 13.19 \cdot ksi$

$A_{S4} := 0.7854 \cdot \left(d_{b4} - \frac{0.9743}{N_4}\right)^2 = 0.031\,in^2$ $\quad A_{R4} := 0.7854 \cdot \left(d_{b4} - \frac{1.2269}{N_4}\right)^2 = 0.028\,in^2$

Demand

Tension $\quad T_4 := 0.0 \cdot lbf = 0$

Shear $\quad V_4 := P_x = 50\,lbf$

Capacity

Tension Capacity $\quad T_{n4} := F_{nt4} \cdot A_{S4} = 702 \cdot lbf$

Shear Capacity $\quad V_{n4} := F_{nv4} \cdot A_{R4} = 366\,lbf$

Interaction

$$IR1_4 := \left(\frac{T_4}{T_{n4}}\right)^2 + \left(\frac{V_4}{V_{n4}}\right)^2 = 0.02$$

CheckASD4 = "OK"

© 2019 R&B Wagner, Inc. All Rights Reserved.
WagnerArchitectural.com

#5 Check Bracket Capacity

1" Dia Bracket Shaft, 316 Stainless Steel

Properties:

$d_5 := 1.0 \cdot in$ $\quad d_{i5} := 0.75 \cdot in$ $\quad L_5 := 2.5 \cdot in$

$A_5 := \frac{\pi \cdot \left(d_5^2 - d_{i5}^2\right)}{4} = 0.34\,in^2$ $\quad r_5 := \frac{\sqrt{d_5^2 + d_{i5}^2}}{4} = 0.31\,in$ $\quad Z_5 := \left(d_5^3 - d_{i5}^3\right) \div 6 = 0.1\,in^3$

$F_{y5} := 30ksi$ $\quad E_5 := 29000ksi$ $\quad t_5 := \left(d_5 - d_{i5}\right) \div 2 = 0.13\,in$

$kLr_5 := \frac{2.0 \cdot L_5}{r_5} = 16$

$\frac{d_5}{t_5} = 8$ $\quad \boxed{<}$ $\quad 0.07 \cdot \frac{E_5}{F_{y5}} = 68$ $\quad$:. Compact Section for Bending

Force

Axial Compression $\quad P_5 := 0.0 \cdot lbf$

Moment $\quad M_5 := 2.5 \cdot in \cdot \sqrt{P_x^2 + P_z^2} = 0.2\,in \cdot kip$

Capacity $\quad \Omega_5 := 1.67$

Compression Strength $\quad kLr_5 = 16$ $\quad \boxed{<}$ $\quad 3.77 \cdot \sqrt{\frac{E_5}{F_{y5}}} = 117$

$F_{e5} := \frac{\pi^2 \cdot E_5}{\left(kLr_5\right)^2} = 1118.04 \cdot ksi$

$F_{cr5} := 0.500^{\left(F_{y5} \div F_{e5}\right)} \cdot F_{y5} = 29.45 \cdot ksi$

$P_{n5} := \frac{\left(F_{cr5} \cdot A_5\right)}{\Omega_5} = 6 \cdot kip$

Moment Capacity $\quad M_{n5} := \frac{F_{y5} \cdot Z_5}{\Omega_5} = 1731 \cdot in \cdot lbf$

Interaction

$IR1_5 := \frac{P_5}{2P_{n5}} + \frac{M_5}{M_{n5}} = 0.11$ $\quad$ CheckASD5 = "OK"

© 2019 R&B Wagner, Inc. All Rights Reserved.
WagnerArchitectural.com

#6 Check Insert Capacity

3/4" Dia Insert Shaft, 316 Stainless Steel

Properties:

$d_6 := 0.75 \cdot in$ $\quad L_6 := 1.25in$ $\quad S_6 := \pi \cdot d_6^3 \div 32 = 0.04\,in^3$

$A_6 := \frac{\pi \cdot d_6^2}{4} = 0.44\,in^2$ $\quad r_6 := \frac{d_6}{4} = 0.19\,in$ $\quad Z_6 := d_6^3 \div 6 = 0.0703\,in^3$

$F_{y6} := 30ksi$ $\quad E_6 := 29000ksi$ $\quad kLr_6 := \frac{1.0 \cdot L_6}{r_6} = 7$

Force

Axial Compression $\quad P_6 := 0.0 \cdot lbf$

Moment $\quad M_6 := 2.5 \cdot in \cdot \sqrt{P_x^2 + P_z^2} = 0.2\,in \cdot kip$

Capacity $\quad \Omega_6 := 1.67$

Compression Strength $\quad kLr_6 = 7 \quad \boxed{<} \quad 3.77 \cdot \sqrt{\frac{E_6}{F_{y6}}} = 117$

$$F_{e6} := \frac{\pi^2 \cdot E_6}{(kLr_6)^2} = 6439.92 \cdot ksi$$

$$F_{cr6} := 0.500^{(F_{y6} \div F_{e6})} \cdot F_{y6} = 29.9 \cdot ksi$$

$$P_{n6} := \frac{(F_{cr6} \cdot A_6)}{\Omega_6} = 8 \cdot kip$$

Moment Capacity $\quad M_{n6} := \min\left(\frac{F_{y6} \cdot Z_6}{\Omega_6}, \frac{1.6 \cdot F_{y6} \cdot S_6}{\Omega_6}\right) = 1190 \cdot in \cdot lbf$

Interaction

$$IR1_6 := \frac{M_6}{M_{n6}} = 0.16$$

$\boxed{CheckASD6 = \text{"OK"}}$

© 2019 R&B Wagner, Inc. All Rights Reserved.
WagnerArchitectural.com

#7 Check Set Screw Capacity

M6x1 Set Screw, A4-50 Stainless Steel

Properties:

$d_{b7} := 6 \cdot mm$ $\quad F_{y7} := 210 \cdot MPa$ $\quad F_{u7} := 500 \cdot MPa$ $\quad N_7 := \frac{1}{1.0} \cdot \frac{1}{mm}$

$F_{nt7} := \min\left(0.75 \cdot F_{y7}, \frac{1}{SF_7} \cdot F_{u7}\right) = 22.84 \cdot ksi$

$F_{nv7} := \min\left(0.75 \cdot F_{y7} \div \sqrt{3}, \frac{1}{SF_7} \cdot F_{u7} \div \sqrt{3}\right) = 13.19 \cdot ksi$

$A_{S7} := 0.7854 \cdot \left(d_{b7} - \frac{0.9743}{N_7}\right)^2 = 0.031\,in^2$

$A_{R7} := 0.7854 \cdot \left(d_{b7} - \frac{1.2269}{N_7}\right)^2 = 0.028\,in^2$

Demand

Tension $\quad T_7 := 0.0 \cdot lbf = 0$

Shear $\quad V_7 := 0.0 \cdot lbf = 0$

Capacity

Tension Capacity $\quad T_{n7} := F_{nt7} \cdot A_{S7} = 702 \cdot lbf$

Shear Capacity $\quad V_{n7} := F_{nv7} \cdot A_{R7} = 366\,lbf$

Interaction

$$IR1_7 := \left(\frac{T_7}{T_{n7}}\right)^2 + \left(\frac{V_7}{V_{n7}}\right)^2 = 0$$

CheckASD7 = "OK"

© 2019 R&B Wagner, Inc. All Rights Reserved.
WagnerArchitectural.com

#8 Check Bolt Capacity

M8x1.25 Bolt, A4-50 Stainless Steel

Properties:

$d_{b8} := 8 \cdot mm$ $\quad F_{y8} := 210 \cdot MPa$ $\quad F_{u8} := 500 \cdot MPa$ $\quad N_8 := \frac{1}{1.25} \cdot \frac{1}{mm}$

$LE_8 := 0.375 \cdot in$ $\quad F_{us8} := 70ksi$ $\quad SF_8 = 2.5$

$F_{nt8} := \min\left(0.75 \cdot F_{y8}, \frac{1}{SF_8} \cdot F_{u8}\right) = 22.84 \cdot ksi$ $\quad F_{nv8} := \min\left(0.75 \cdot F_{y8} \div \sqrt{3}, \frac{1}{SF_8} \cdot F_{u8} \div \sqrt{3}\right) = 13.19 \cdot ksi$

$A_{S8} := 0.7854 \cdot \left(d_{b8} - \frac{0.9743}{N_8}\right)^2 = 0.056 in^2$ $\quad A_{R8} := 0.7854 \cdot \left(d_{b8} - \frac{1.2269}{N_8}\right)^2 = 0.051 in^2$

Demand

Tension $\quad T_8 := \frac{2.5 \cdot in \cdot \sqrt{P_x^2 + P_z^2}}{90\% \cdot 0.75 \cdot in \div 2} = 579 lbf$

Shear $\quad V_8 := \sqrt{P_x^2 + P_z^2} = 78 lbf$

Capacity

Tension Capacity $\quad T_{n8} := F_{nt8} \cdot A_{S8} = 1279 \cdot lbf$

Shear Capacity $\quad V_{n8} := F_{nv8} \cdot A_{R8} = 671 lbf$

Pull-out Capacity

$TSA_{E8} := 15.20 \cdot mm^2$ $\quad TSA_{I8} := 21.04 \cdot mm^2$

Internal Thread Capacity $\quad$ Conditions = "Thick"

$T_{I8} := \frac{LE_8 \cdot N_8 \cdot TSA_{I8} \cdot F_{us8}}{SF_8 \cdot \sqrt{3}} = 4017 lbf$

External Thread Capacity

$T_{E8} := \min\left(\frac{LE_8 \cdot N_8 \cdot TSA_{E8} \cdot F_{u8}}{SF_8 \cdot \sqrt{3}}, \frac{0.75 \cdot LE_8 \cdot N_8 \cdot TSA_{E8} \cdot F_{y8}}{\sqrt{3}}\right) = 2368 lbf$

Pull-out Capacity $\quad T_{outn8} := \min(T_{I8}, T_{E8}) = 2368 \cdot lbf$

Interaction

$IR1_8 := \left(\frac{T_8}{T_{n8}}\right)^2 + \left(\frac{V_8}{V_{n8}}\right)^2 = 0.22$ $\quad IR2_8 := \left(\frac{T_8}{T_{outn8}}\right)^2 = 0.06$ $\quad$ CheckASD8 = "OK"

© 2019 R&B Wagner, Inc. All Rights Reserved.
WagnerArchitectural.com

6.5. Handrail Connection

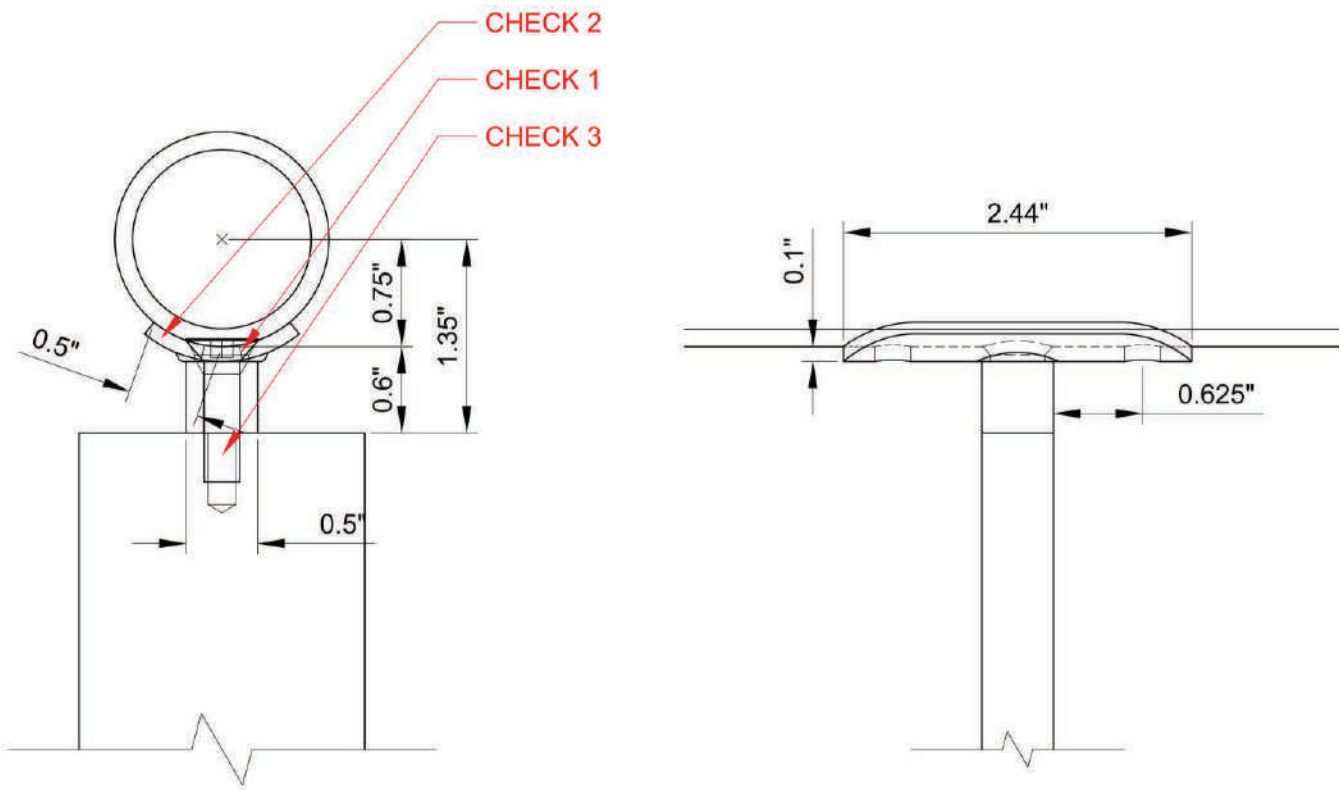

Connection Detail

© 2019 R&B Wagner, Inc. All Rights Reserved.
WagnerArchitectural.com

Loads (ASD)

$P := 200 \cdot lbf$

#1 Check Bolt Capacity

(2) - #10-16 Bolts, 316 Stainless Steel, Condition A

Properties:

$d_{b1} := 0.1900 \cdot in$ $\quad F_{y1} := 30 \cdot ksi$ $\quad F_{u1} := 75ksi$ $\quad N_1 := 16 \cdot \frac{1}{in}$

$K_1 := 0.1350 \cdot in$ $\quad LE_1 := 0.120 \cdot in$ $\quad F_{us1} := 70ksi$ $\quad SF_1 = 3$

$F_{nt1} := \min\left(0.75 \cdot F_{y1}, \frac{1}{SF_1} \cdot F_{u1}\right) = 22.5 \cdot ksi$ $\quad F_{nv1} := \min\left(0.75 \cdot F_{y1} \div \sqrt{3}, \frac{1}{SF_1} \cdot F_{u1} \div \sqrt{3}\right) = 12.99 \cdot ksi$

$A_{S1} := 0.7854 \cdot K_1^2 = 0.014\, in^2$ $\quad A_{R1} := 0.7854 \cdot K_1^2 = 0.014\, in^2$

Demand

Tension $\quad T_1 := \frac{P}{2 \cdot Bolts} \cdot \frac{0.75 \cdot in}{90\% \cdot 0.50 \cdot in} = 167\, lbf$

Shear $\quad V_1 := \frac{P}{2 \cdot Bolts} = 100\, lbf$

Capacity

Tension Capacity $\quad T_{n1} := F_{nt1} \cdot A_{S1} = 322 \cdot lbf$

Shear Capacity $\quad V_{n1} := F_{nv1} \cdot A_{R1} = 186\, lbf$

Pull-out Capacity

$TSA_{E1} := 0.0110 \cdot in^2$ $\quad TSA_{I1} := 0.0170$

Internal Thread Capacity $\quad$ Conditions = "Thin"

$$T_{I1} := \frac{0.85 \cdot LE_1 \cdot d_{b1} \cdot F_{us1}}{SF_1} = 452\, lbf$$

External Thread Capacity

$$T_{E1} := \min\left(\frac{LE_1 \cdot N_1 \cdot TSA_{E1} \cdot F_{u1}}{SF_1 \cdot \sqrt{3}}, \frac{0.75 \cdot LE_1 \cdot N_1 \cdot TSA_{E1} \cdot F_{y1}}{\sqrt{3}}\right) = 274\, lbf$$

Pull-out Capacity $\quad T_{outn1} := \min(T_{I1}, T_{E1}) = 274 \cdot lbf$

Interaction

$$IR1_1 := \left(\frac{T_1}{T_{n1}}\right)^2 + \left(\frac{V_1}{V_{n1}}\right)^2 = 0.56 \qquad IR2_1 := \left(\frac{T_1}{T_{outn1}}\right)^2 = 0.37$$

CheckASD1 = "OK"

#2 Check Saddle Bracket for Bending

1.08" x 0.275" x 0.10" Plate, 316 Stainless Steel

Properties:

$F_{y2} := 30 \cdot ksi$ $\quad J_2 := 0.0004 \cdot in^4$ $\quad Z_2 := 0.0058 \cdot in^3$ $\quad t_2 := 0.100 \cdot in$

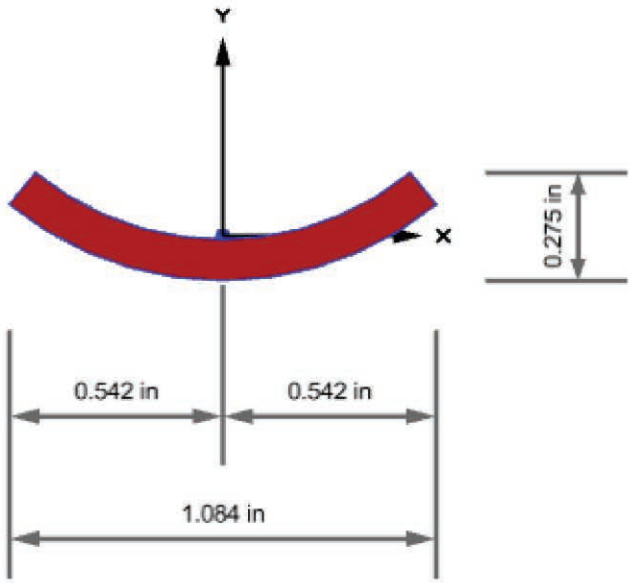

Plastic Properties

Zx	0.0058 in³
Zy	0.0304 in³

Force

Weak Axis Moment $\quad M_2 := T_1 \cdot 0.625 \cdot in = 0.1 \cdot kip \cdot in$

Capacity

$\Omega_2 := 1.67$

Weak Axis Moment $\quad M_{n2} := \frac{F_{y2} \cdot Z_2}{\Omega_2} = 0.1\, in \cdot kip$

Interaction

$IR1_2 := \frac{M_2}{M_{n2}} = 1$

CheckASD2 = "OK"

© 2019 R&B Wagner, Inc. All Rights Reserved.
WagnerArchitectural.com

#3 Check Bolt Capacity

(1) - 1/4"-20 Bolts, 316 Stainless Steel, Condition CW, 3/8" min. Thread Engagement

Properties:

$d_{b3} := 0.25 \cdot in$ $\quad F_{y3} := 65 \cdot ksi$ $\quad F_{u3} := 100ksi$ $\quad N_3 := 20 \cdot \frac{1}{in}$

$LE_3 := 0.375 \cdot in$ $\quad F_{us3} := 70ksi$ $\quad SF_3 = 3$

$$F_{nt3} := \min\left(0.75 \cdot F_{y3}, \frac{1}{SF_3} \cdot F_{u3}\right) = 33.33 \cdot ksi$$

$$F_{nv3} := \min\left(0.75 \cdot F_{y3} \div \sqrt{3}, \frac{1}{SF_3} \cdot F_{u3} \div \sqrt{3}\right) = 19.25 \cdot ksi$$

$$A_{S3} := 0.7854 \cdot \left(d_{b3} - \frac{0.9743}{N_3}\right)^2 = 0.032\, in^2$$

$$A_{R3} := 0.7854 \cdot \left(d_{b3} - \frac{1.2269}{N_3}\right)^2 = 0.028\, in^2$$

Demand

Tension $\quad T_3 := 90\% \cdot P \cdot \frac{1.35 \cdot in}{0.5 \cdot in \div 2} = 972\, lbf$

Shear $\quad V_3 := 90\% \cdot P = 180\, lbf$

Note: 10% of the load will distribute to the other handrail post

Capacity

Tension Capacity $\quad T_{n3} := F_{nt3} \cdot A_{S3} = 1061 \cdot lbf$

Shear Capacity $\quad V_{n3} := F_{nv3} \cdot A_{R3} = 538\, lbf$

Pull-out Capacity

$TSA_{E3} := 0.0180 \cdot in^2$ $\quad TSA_{I3} := 0.0270 \cdot in^2$

Internal Thread Capacity $\quad$ Conditions = "Thick"

$$T_{I3} := \frac{LE_3 \cdot N_3 \cdot TSA_{I3} \cdot F_{us3}}{SF_3 \cdot \sqrt{3}} = 2728\, lbf$$

External Thread Capacity

$$T_{E3} := \min\left(\frac{LE_3 \cdot N_3 \cdot TSA_{E3} \cdot F_{u3}}{SF_3 \cdot \sqrt{3}}, \frac{0.75 \cdot LE_3 \cdot N_3 \cdot TSA_{E3} \cdot F_{y3}}{\sqrt{3}}\right) = 2598\, lbf$$

Pull-out Capacity $\quad T_{outn3} := \min(T_{I3}, T_{E3}) = 2598 \cdot lbf$

Interaction

$$IR1_3 := \left(\frac{T_3}{T_{n3}}\right)^2 + \left(\frac{V_3}{V_{n3}}\right)^2 = 0.95$$

$$IR2_3 := \frac{T_3}{T_{outn3}} = 0.37$$

CheckASD3 = "OK"

© 2019 R&B Wagner, Inc. All Rights Reserved.
WagnerArchitectural.com

7. Railing Glass Design

7.1. General Design Criteria

Young's Modulus: 10,400,000 psi
Poisson Ratio: 0.22
Coefficient of Thermal Expansion = 4.9 x 10^{-6} in/in/°F

Per IBC 2015, Section 2407.1.1 Loads on Glass Handrails and Guards, use a design factor of 4.0.
Per AAMA CW-12-84, use a design factor against Modulus of Rupture for Flexure.

Allowable Glass Stress = 24,000psi (Modulus of Rupture of Fully Tempered Glass) / 4 SF = 6,000psi

The glass is analyzed with the Minimum Thickness per Table 4 in ASTM E1300 or per EN14179-1:

Dimensional Tolerances for Transparent Flat Glass per ASTM C1036

Nominal Designation		**Thickness Range**	
Imperial (US)	SI (Metric)	Minimum *(mm)*	Maximum *(mm)*
5/32"	4 mm	0.149" *(3.78)*	0.165" *(4.19)*
3/16"	5 mm	0.180" *(4.57)*	0.199" *(5.05)*
1/4"	6 mm	0.219" *(5.56)*	0.244" *(6.20)*
5/16"	8 mm	0.292" *(7.42)*	0.332" *(8.43)*
3/8"	10 mm	0.355" *(9.02)*	0.406" *(10.31)*
1/2"	12 mm	0.469" *(11.91)*	0.531" *(13.49)*
5/8"	16 mm	0.595" *(15.09)*	0.656" *(16.66)*
3/4"	19 mm	0.719" *(18.26)*	0.781" *(19.84)*

Note: Table for reference only

7.2. SG Interlayer

Thickness = 0.060"

Temp (C)	Temp (F)	Load Duration	Load Type	Young's Modulus (psi)	Poisson's Ratio
24	75	3 sec	Wind*	81,502	0.453

7.3. Overall Location and Geometry

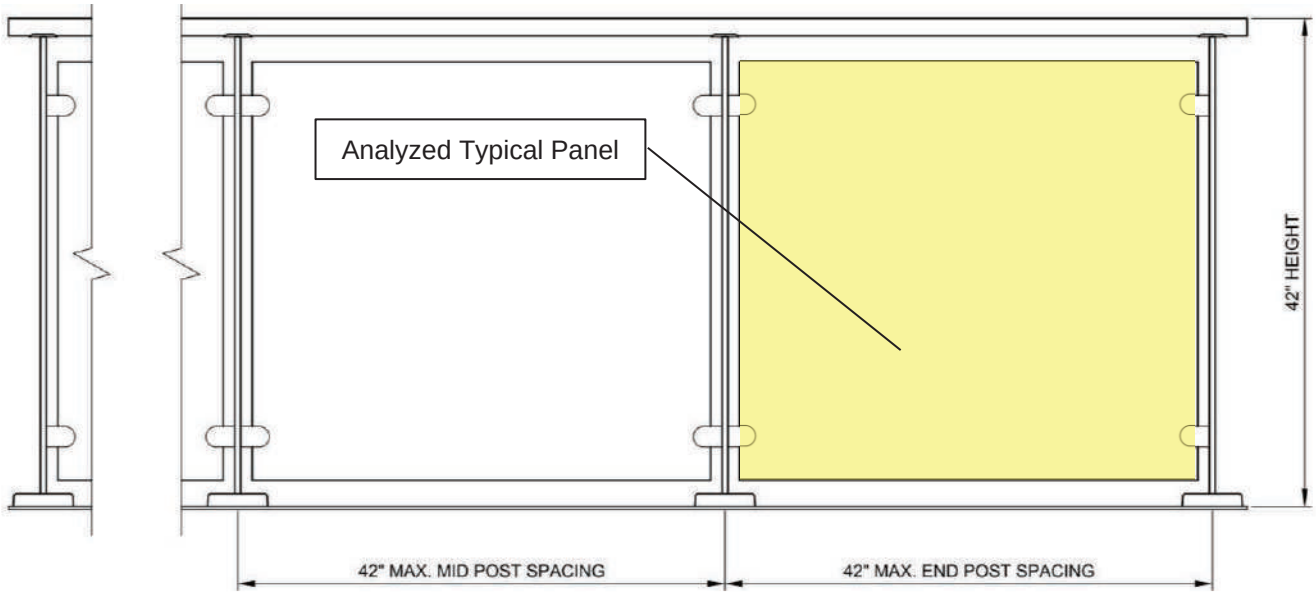

7.4. Glass Panel – Glass Clip Series

7.4.1. Glass Panel Dimensions

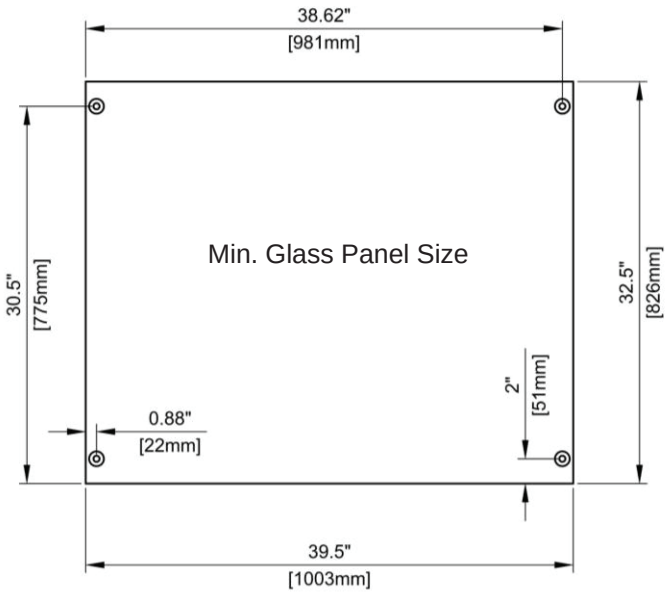

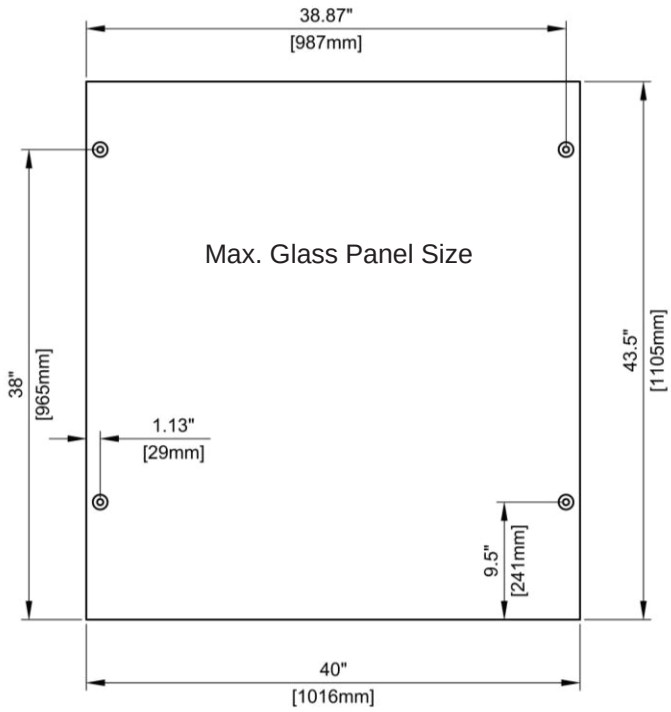

Min. Glass Panel Dimensions (W x H) = 39-1/2” x 32-1/2”.

Max. Glass Panel Dimensions (W x H) = 40” x 43-1/2”.

Max. and Min. glass dimensions create a design envelope to which the glass analysis applies. They do not guarantee that every glass panel size within these boundaries will fit into the railing system. Follow the applicable railing glass size guideline and standards and consult with the glass manufacturer for manufacturing tolerances.

7.4.2. Glass Composition

1.) 1/4” Fully Tempered Glass
2.) 0.06” SG Interlayer
3.) 1/4” Fully Tempered Glass

Note: Min. glass infill panel nominal thickness = 9/16”. Max. glass infill panel nominal thickness = 11/16”

All glass panels to be fully tempered and laminated with SG interlayer.

7.4.3. Glass Loads

PL = 5psf
LL = 50plf (for deflection purposes only)
LLc = 50lbf

Note: Glass panels are analyzed for all applicable load combinations. Only the governing load combination is shown in the result section.

© 2019 R&B Wagner, Inc. All Rights Reserved.
WagnerArchitectural.com

7.4.4. Stress Utilization

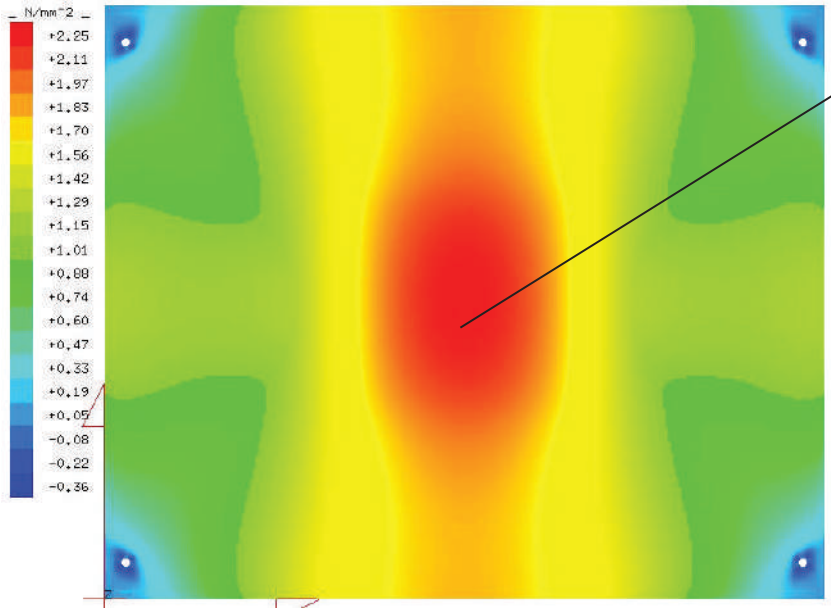

Max. Principal Stress = 2.25 MPa = 326 psi < Allowable Stress = 6,000psi OK

Load Case: DL + LLc

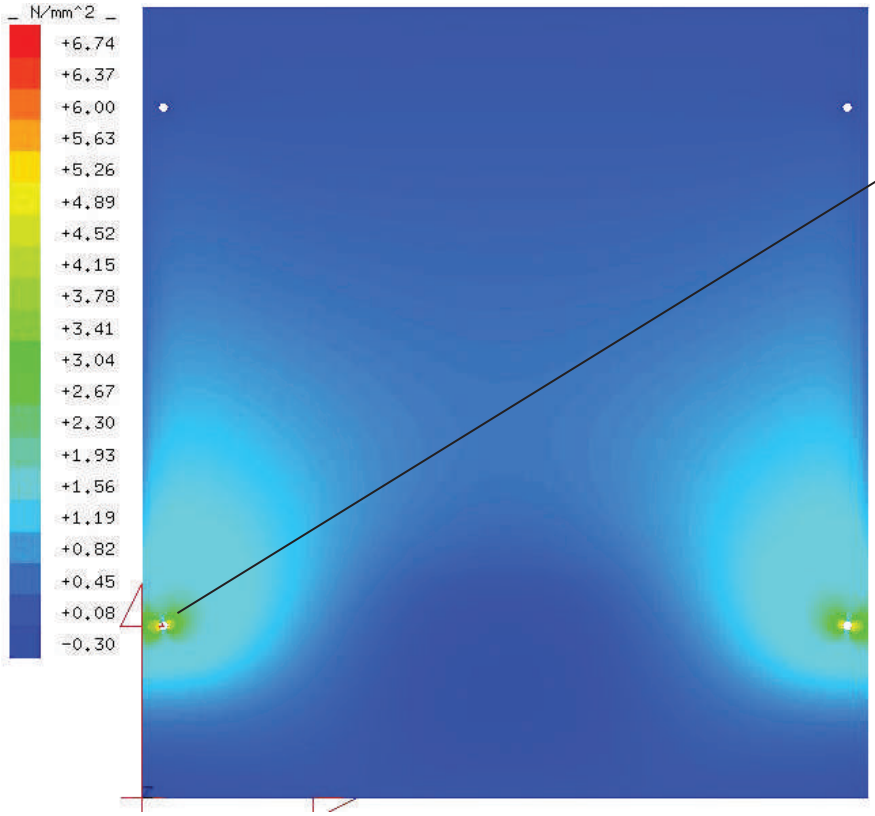

Max. Principal Stress = 6.74 MPa = 980 psi < Allowable Stress = 6,000psi OK

Load Case: DL + LLc

© 2019 R&B Wagner, Inc. All Rights Reserved.
WagnerArchitectural.com

7.4.5. Deflection Utilization

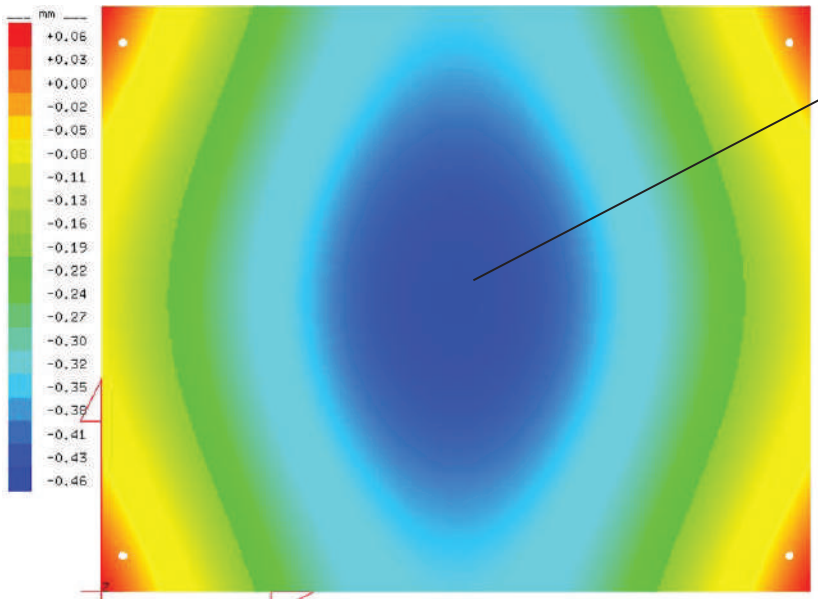

Max. Deflection = 0.02” < L/50 = 0.73” OK

Load Case: DL + LLc

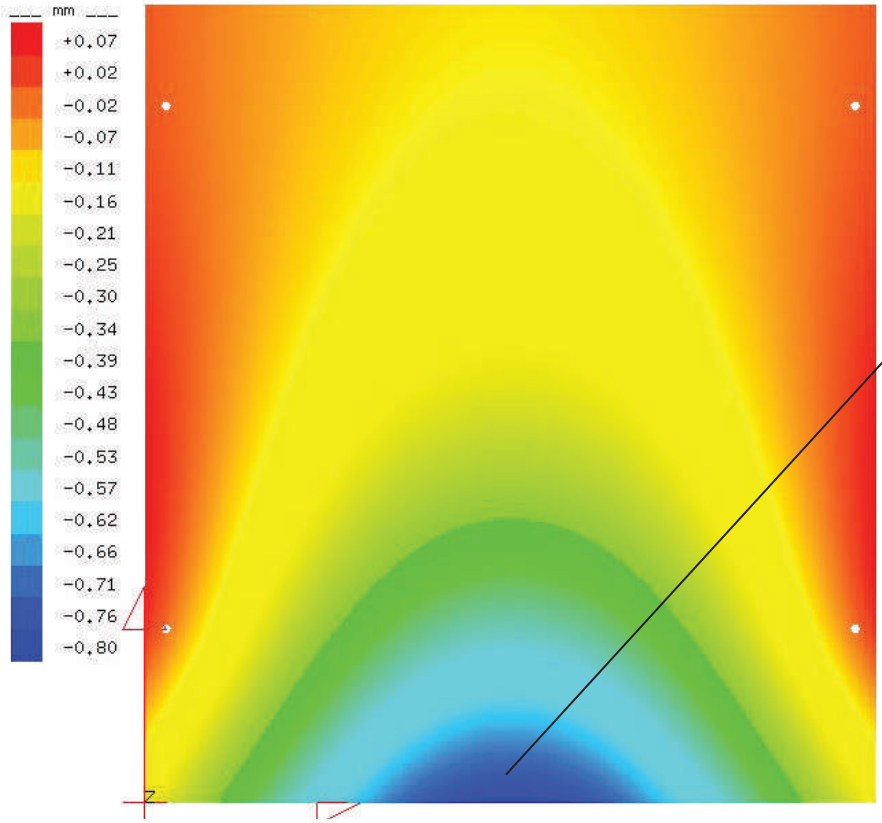

Max. Deflection = 0.03” < L/50 = 0.73” OK

Load Case: DL + LLc

© 2019 R&B Wagner, Inc. All Rights Reserved.
WagnerArchitectural.com

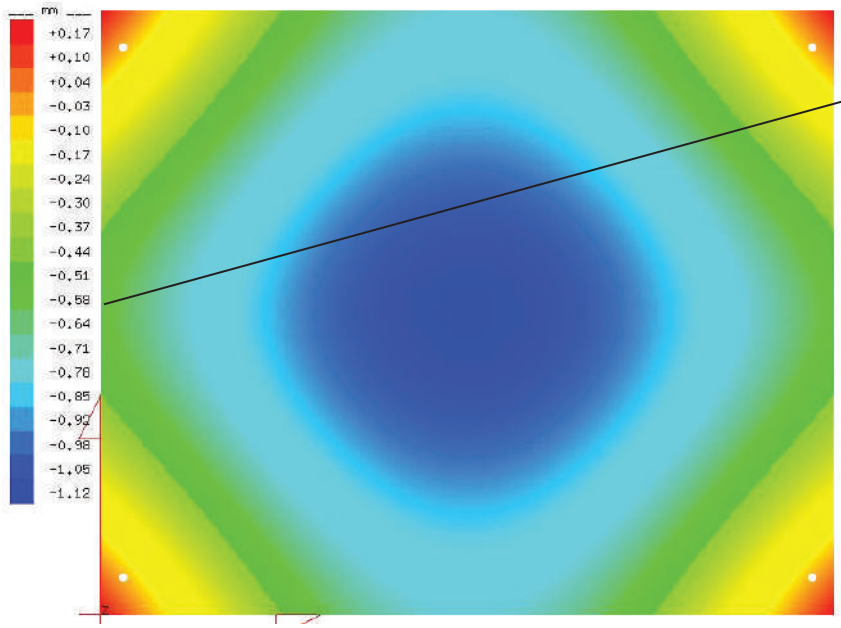

Max. Edge Deflection = 0.02”
< Glass Thickness = 9/16”, OK

Load Case: DL + LL

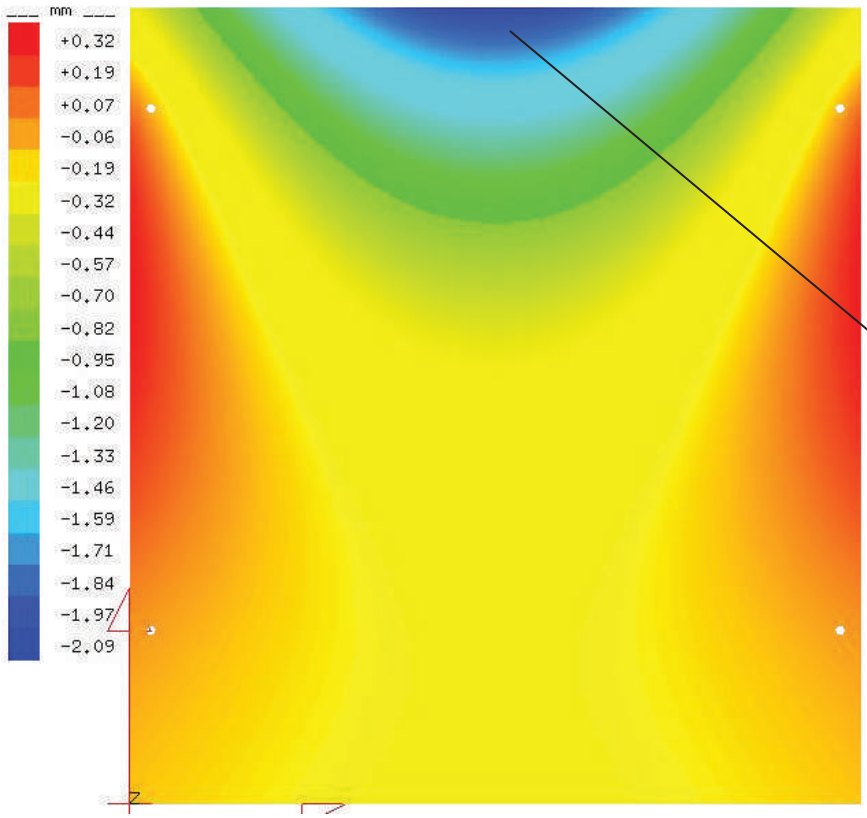

Max. Edge Deflection = 0.08”
< Glass Thickness = 9/16”, OK

Load Case: DL + LL

© 2019 R&B Wagner, Inc. All Rights Reserved.
WagnerArchitectural.com

7.5. Glass Panel – Spider Clip Series

7.5.1. Glass Panel Dimensions

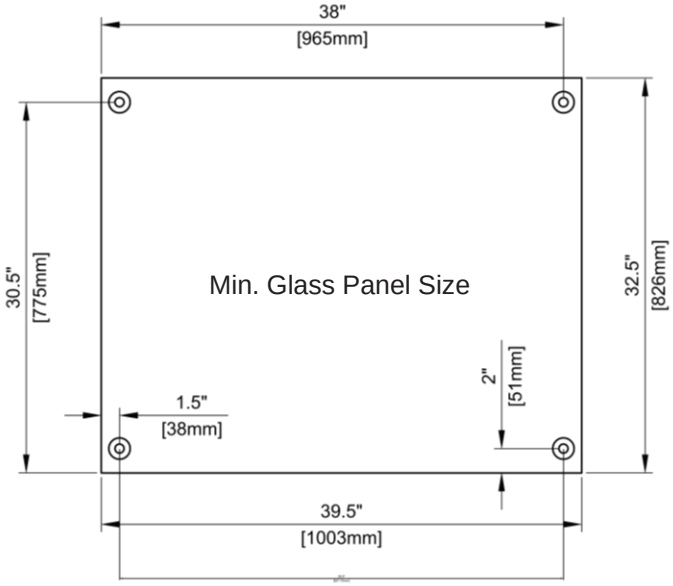

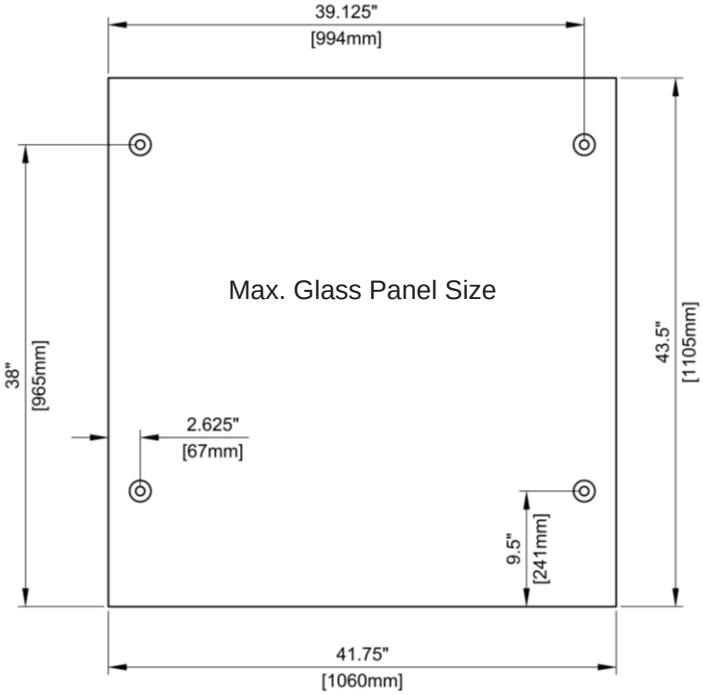

Min. Glass Panel Dimensions (W x H) = 39-1/2” x 32-1/2”.

Max. Glass Panel Dimensions (W x H) = 41-3/4” x 43-1/2”.

Max. and Min. glass dimensions create a design envelope to which the glass analysis applies. They do not guarantee that every glass panel size within these boundaries will fit into the railing system. Follow the applicable railing glass size guideline and standards and consult with the glass manufacturer for manufacturing tolerances.

7.5.2. Glass Composition

4.) 1/4” Fully Tempered Glass
5.) 0.06” SG Interlayer
6.) 1/4” Fully Tempered Glass

Note: Min. glass infill panel nominal thickness = 9/16”. Max. glass infill panel nominal thickness = 11/16”

All glass panels to be fully tempered and laminated with SG interlayer.

7.5.3. Glass Loads

PL = 5psf
LL = 50plf (for deflection purposes only)
LLc = 50lbf

Note: Glass panels are analyzed for all applicable load combinations. Only the governing load combination is shown in the result section.

© 2019 R&B Wagner, Inc. All Rights Reserved.
WagnerArchitectural.com

7.5.4. Stress Utilization

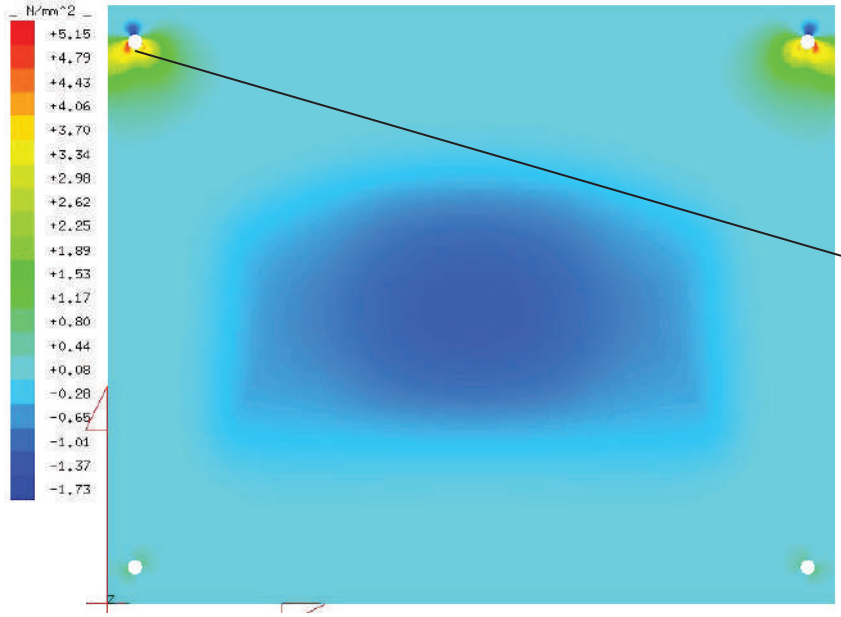

Max. Principal Stress = 5.15 MPa = 750 psi < Allowable Stress = 6,000psi OK

Load Case: DL + LLc

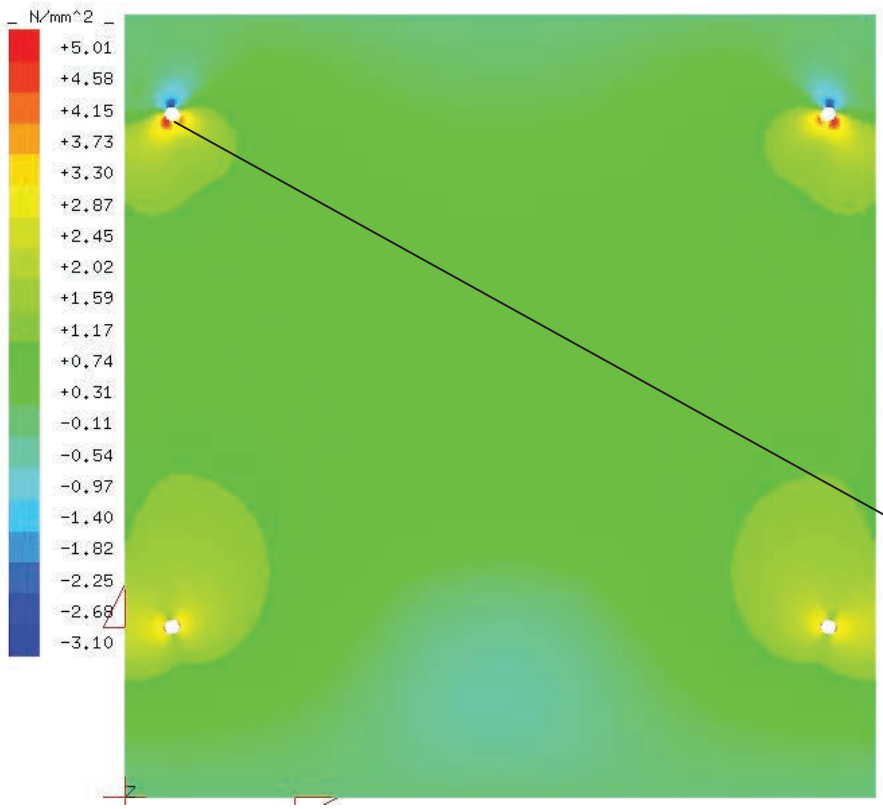

Max. Principal Stress = 5.01 MPa = 730 psi < Allowable Stress = 6,000psi OK

Load Case: DL + LLc

© 2019 R&B Wagner, Inc. All Rights Reserved.
WagnerArchitectural.com

7.5.5. Deflection Utilization

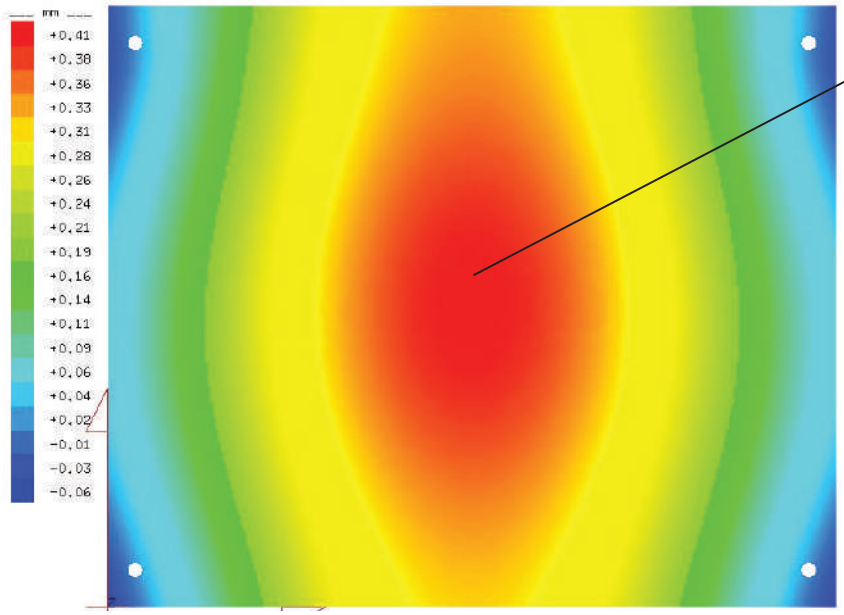

Max. Deflection = 0.02” < L/50 = 0.73” OK

Load Case: DL + LLc

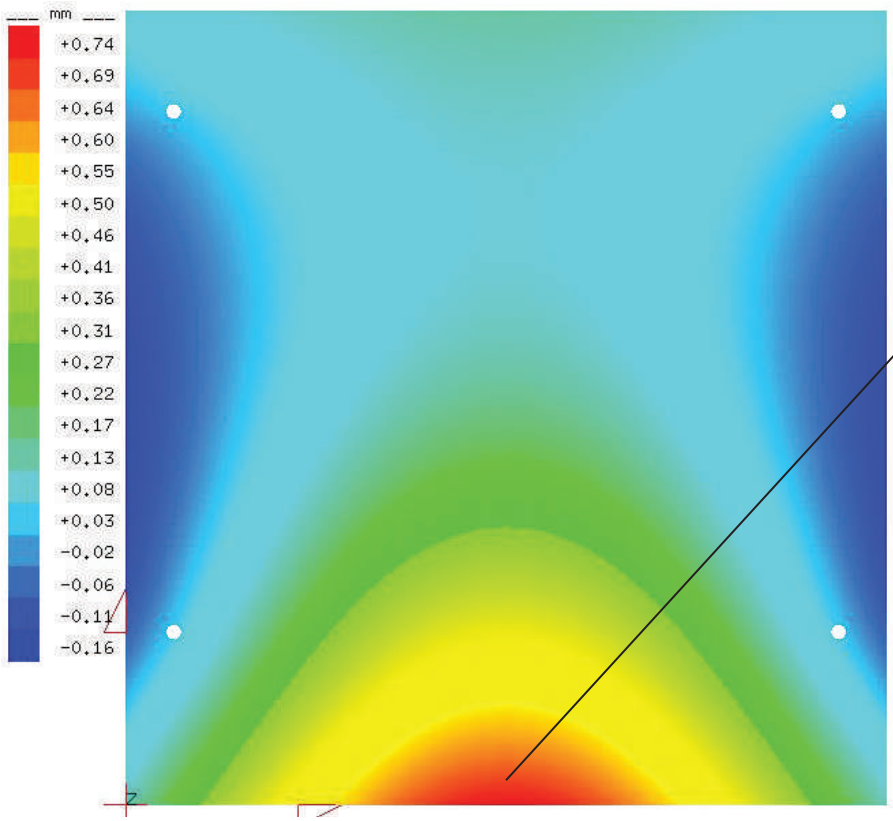

Max. Deflection = 0.03” < L/50 = 0.73” OK

Load Case: DL + LLc

© 2019 R&B Wagner, Inc. All Rights Reserved.
WagnerArchitectural.com

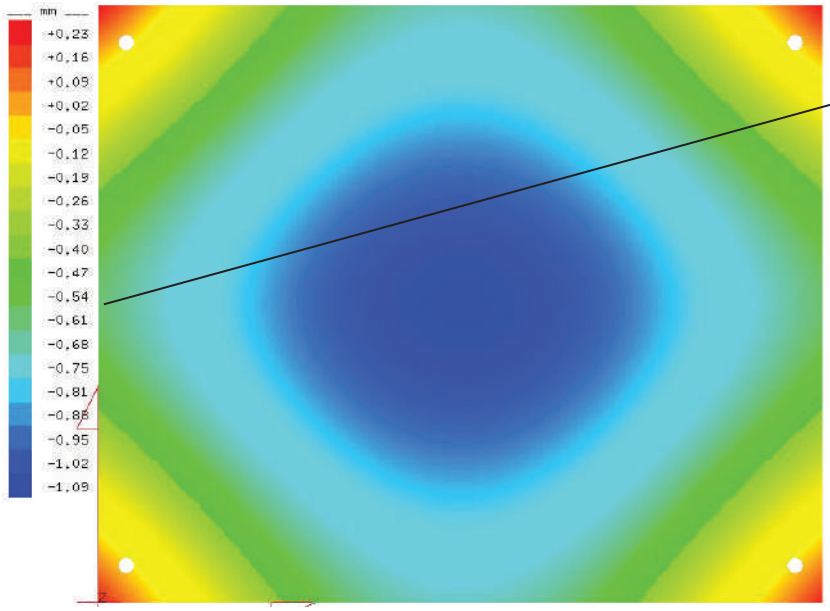

Max. Edge Deflection = 0.02”
< Glass Thickness = 9/16”, OK

Load Case: DL + LL

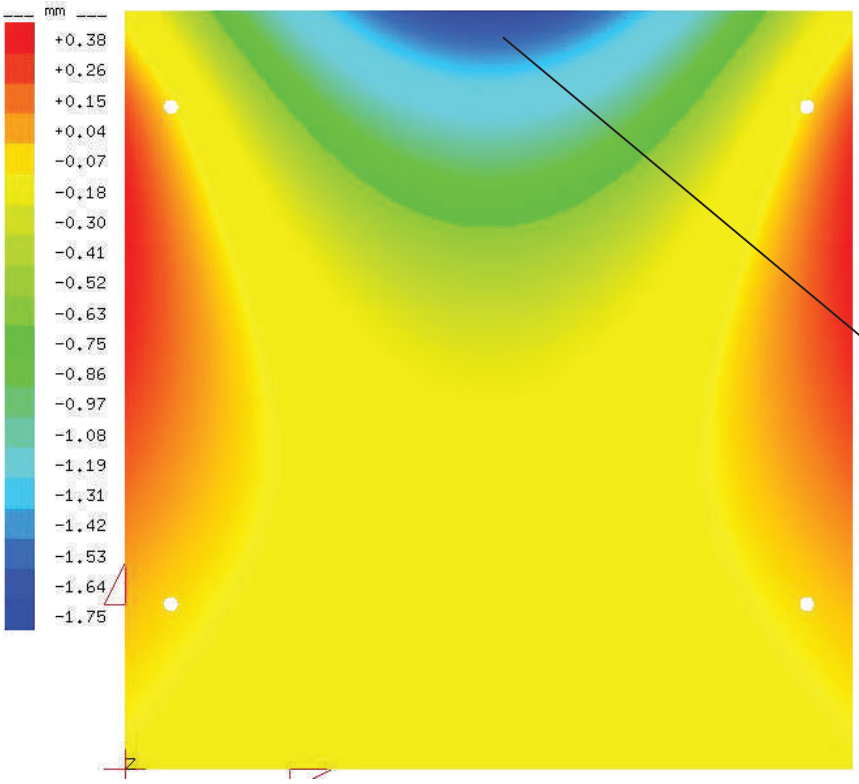

Max. Edge Deflection = 0.07”
< Glass Thickness = 9/16”, OK

Load Case: DL + LL

© 2019 R&B Wagner, Inc. All Rights Reserved.
WagnerArchitectural.com

8. Disclaimers

1.) This engineering document is NOT signed and sealed by a professional engineer. Contact Stutzki Engineering, Inc. for a project specific review if sign and seal is required.

2.) This engineering report includes engineering only for the system and components shown in the project description. If the railing is outside the parameters of this report (including size, loading, concrete anchor spacing, etc.), it is not covered by this report and should be reviewed by a professional engineer. Contact Stutzki Engineering, Inc. if special cases must be considered.

3.) Prior to installation, all glass shall be inspected for cracks, chips and other imperfections. Any imperfection shall be grounds for inspection by the supplier. A broken lite shall be grounds for immediate replacement. The supporting system, supplied and analyzed by others, shall resist horizontal sliding and vertical separation of the glass during service loads without imposing external loads from the surrounding structure into the glass. Proper spacing shall be used for adjacent pieces of glass to allow for thermal expansion and small movements during service. Appropriate fillet radiuses shall be used at all interior corners to reduce stress concentrations.

4.) All dissimilar metals should be separated and/or protected from water and humidity. Detailing responsibility for this condition is by others.

5.) Only items within the scope of Stutzki Engineering are designed in this report. The supporting structure (including local effects at the connection interface) are designed by others and must resist the reaction loads given in this report. The stiffness of the supporting structure (analyzed by others) must not cause the handrail system to over-deflect.

6.) This document does not include Windborne-Debris-Impact Resistance design and/or certification.

7.) All laminated glass and fully tempered monolithic glass must be considered Safety Glazing per applicable building codes. Compliance with this requirement is to be done by the glass manufacture.

© 2019 R&B Wagner, Inc. All Rights Reserved.
WagnerArchitectural.com

9. Stutzki Engineering

Stutzki Engineering, Inc. is an engineering consulting firm, offering and executing engineering services for architects and building contractors in the field of structural glass, lightweight structures, and building facades. Our engineering solutions help them make their product unique.

The ideas and methods of Stutzki Engineering, Inc. are based on a long tradition of academic research and industrial development, as represented by persons like Buckminster Fuller, Frei Otto, John Argyris, Max Mengeringhausen and Herbert Klimke. The idea behind the company is to combine state of the art engineering and applied science with creative industrial design.

241 N. Broadway, Suite 302
Milwaukee, WI 53202
USA.

Phone: (414) 455-4815

http://www.stutzkiengineering.com

© 2019 R&B Wagner, Inc. All Rights Reserved.
WagnerArchitectural.com